Polo Estate 1998 ➤

Motronic injection and ignition system									
Engine ID	AEX	AKV	APQ	ANX					

Edition 11.1995

Protected by copyright. Copying for private or commercial purposes, in part or in whole, is not permitted unless authorised by Volkswagen AG. Volkswagen AG does not guarantee or accept any liability with respect to the correctness of information in this document. Copyright by Volkswagen AG.

satelettronica

List of Workshop Manual Repair GroupsList of Workshop Manual Repair GroupsList of Workshop Manual Repair Groups

Polo Estate 1998 ➤

Motronic injection and ignition system

Protected by copyright. Copyright for private or commercial purposes, in part or in whole, is not permitted unless authorised by Volkswagen AG. Volkswagen AG does not guarantee or accept any liability with respect to the correctness of information in this document. Copyright by Volkswagen AG.

satelettronica

Repair Group

01 - Self-diagnosis

24 - Mixture preparation, Injection

28 - Ignition system

Technical information should always be available to the foremen and mechanics, because their careful and constant adherence to the instructions is essential to ensure vehicle road-worthiness and safety. In addition, the normal basic safety precautions for working on motor vehicles must, as a matter of course, be observed.

All rights reserved.
No reproduction without prior agreement from publisher.

Copyright © 2011 Volkswagen AG, Wolfsburg

00056405420

Contents

01 - Self-diagnosis 1

1 **Self-diagnosis** 1
1.1 Self-diagnosis 1
1.2 Features of self-diagnosis 1
1.3 Technical data of self-diagnosis 1
1.4 Connecting fault reader V.A.G 1551 and selecting engine control unit 2
1.5 Interrogating and erasing fault memory 3
1.6 Fault table 5
1.7 Final control diagnosis 10
1.8 Read measured value block and basic settings 12
1.9 Display group overview 12

24 - Mixture preparation, Injection 16

1 **Servicing injection system** 16
1.1 Servicing injection system 16
1.2 Fitting locations overview 16
1.3 General notes on injection 19
1.4 Removing and installing parts of the injection system 20
1.5 Dismantling and assembling fuel rail with injectors 26
1.6 Dismantling and assembling intake manifold 27
1.7 Dismantling and assembling air cleaner 29
1.8 Safety precautions 31
1.9 Rules for cleanliness 32
1.10 Technical data 32
1.11 Performing basic setting 32
1.12 Checking Lambda probe and Lambda control 33
1.13 Checking Lambda probe heating 35
1.14 Checking engine operating mode 37
1.15 Checking throttle valve control part 38
1.16 Checking intake manifold pressure sender 44
1.17 Testing speed signal 45
1.18 Checking coolant temperature sender 47
1.19 Checking intake air temperature sender 49
1.20 Checking control unit voltage supply 52
1.21 Matching engine control unit to electronic immobilizer 53
1.22 Checking air conditioner and air conditioner compressor signals 54
1.23 Checking injectors 56
1.24 Checking fuel pressure regulator and holding pressure 58
1.25 Checking intake air system for leaks (unmetered air) 61
1.26 Checking intake air preheating 61
1.27 Wire routing engine wiring loom 63

28 - Ignition system 65

1 **Servicing ignition system** 65
1.1 Servicing ignition system 65
1.2 General notes on ignition system 65
1.3 Removing and installing parts of the ignition system 66
1.4 Dismantling and assembling distributor 69
1.5 Safety precautions 70
1.6 Adjustment data, Spark plugs 70
1.7 Checking and adjusting ignition timing 70
1.8 Checking Hall sender 72
1.9 Checking ignition transformer and output stage 73
1.10 Checking knock sensor 75

Volkswagen AG. Volkswagen AG does not guarantee or accept any liability with respect to the content of this document. Copyright by Volkswagen AG. Printed copy of this document is uncontrolled. Only valid for the current date. Reproduction or publication in whole or in part is not permitted unless authorised by Volkswagen AG.
satelettronica

Protected by copyright. Copying for private or commercial purposes, in part or in whole, is not permitted unless authorised by Volkswagen AG. Volkswagen AG does not guarantee or accept any liability with respect to the correctness of information in this document. Copyright by Volkswagen AG.

satelettronica

01 - Self-diagnosis

1 - Self-diagnosis

1.1 - Self-diagnosis

Note:

The self-diagnosis monitors only a part of the injection and ignition system. For fault finding the binder "Fault finding engine" must also be used in every case.

1.2 - Features of self-diagnosis

The engine control unit (Motronic control unit J220) is equipped with a fault memory.

If faults occur in the sensors and components being monitored, they will be stored in the fault memory together with an indication of the type of fault.

Faults which only occur sporadically will have the addendum "sporadic fault" on the print out. These faults will be indicated on the display by the addendum "/SP". The cause of sporadic faults can be e.g. a loose contact or a brief open circuit. If a sporadic fault does not occur again within 50 engine starts, it will be erased from the fault memory.

The faults stored can be read-out with the fault reader V.A.G 1551 or the vehicle system tester V.A.G 1552 => Page 3 .

The fault memory must be erased after the faults has been eliminated => Page 3 .

Note:

General information for self-diagnosis is in the fault reader V.A.G 1551 and the vehicle system tester V.A.G 1552 instruction manuals.

1.3 - Technical data of self-diagnosis

Equipped with

- The data transfer between control unit and fault reader V.A.G 1551 or vehicle system tester V.A.G 1552 is carried out in the operating mode "Rapid data transfer".
- The fault memory is equipped with a non-volatile memory.

Interrogating control unit versions

The control unit version is displayed when the fault reader V.A.G 1551 or the vehicle system tester V.A.G 1552 is connected and engine electronics control unit selected => Page 2 .

Selectable functions when using the fault reader V.A.G 1551 or V.A.G 1552

The prerequisites for selecting the desired functions can be taken from the following table.

Protected by copyright. Copying for private or commercial purposes, in part or in whole, is not permitted unless authorised by Volkswagen AG. Volkswagen AG does not guarantee or accept any liability with respect to the correctness of information in this document. Copyright by Volkswagen AG.
satelettronica

Function	Prerequisite	
	Engine stationary, ignition switched on	Engine running at idling speed
02 Interrogating fault memory	yes	yes
03 Final control diagnosis	yes	no
04 Basic setting	yes1)	yes2)3)
05 Erasing fault memory	yes	yes
06 Ending output	yes	yes
08 Read measured value block	yes	yes
09 Read individual measured value4)	yes	yes

1) Must be carried out after performing the following work:
Replacing control unit, throttle valve control part or engine.

2) Only possible when the coolant temperature is above 80 °C. Prior to this, this function is blocked.

3) Must be carried out when checking and adjusting the ignition timing point.

4) Currently is only used for checks in the factory.

1.4 - Connecting fault reader V.A.G 1551 and selecting engine control unit

Special tools, testers, measuring instruments and auxiliary items required

- Fault reader V.A.G 1551 with cable V.A.G 1551/3

Note:

The vehicle system tester V.A.G 1552 can be used instead of the fault reader V.A.G 1551, however a print-out is not possible.

Check conditions

- Battery voltage at least 11 V
- Fuse 21 OK.

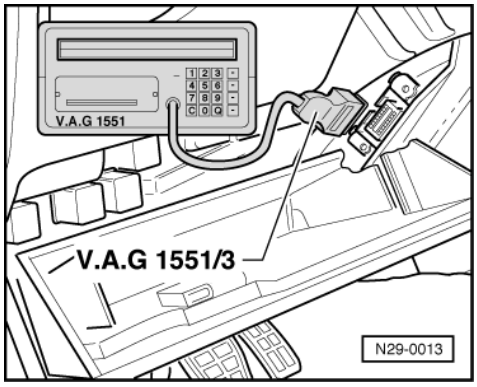

- Earth connections on front of clutch housing/on cylinder head OK.

Protected by copyright. Copyright by Volkswagen AG. Volkswagen AG does not guarantee or accept any liability with respect to the correctness of information in this document. Copyright by Volkswagen AG. Reproduced unless authorised by Volkswagen AG, in whole, is not permitted for commercial purposes, in part.
satelettronica

Work sequence

- -> Fold driver's side stowage compartment down.
- Connect fault reader V.A.G 1551 with cable V.A.G 1551/3.

After the fault reader has been connected:

- Depending upon desired function:
  Switch ignition on
  or
  Start engine => Page 1 , Table "Selectable functions".

Notes:

- If the display remains blank, check diagnostic connector voltage supply =>Fault finding programme in "Current flow diagrams, Electrical fault finding and Fitting locations" binder
- If the display does not indicate as described in the work sequence:

=> Fault reader operating instructions

- If due to an input fault "Fault in the data transfer!" is displayed, pull wire off fault reader, reconnect and repeat work step.

-> Indicated on display:

```
V.A.G - SELF DIAGNOSIS      HELP
     1 - Rapid data transfer*
     2 - Flash code output*
```

* Appears alternately

- Operate fault reader taking into account the information on the display:
- Press key 1 for "Rapid data transfer".
- Press keys 0 and 1 for address word "Engine electronics" and confirm entry with Q key.

-> The fault reader V.A.G 1551 display will show the control unit identification, e.g.:

```
6K0906027A     MOTRONIC MP 9.0     S002
□
```

- 6K0 906 027A = Part No. of control unit
- Motronic MP 9.0 = System designation and version
- S002 = Programme level number

- Press the ⇒key.

-> Indicated on display:

```
Rapid data transfer     HELP
Select function XX
```

- Further measures see repair procedures.

1.5 - Interrogating and erasing fault memory

Special tools, testers, measuring instruments and auxiliary items required

- Fault reader V.A.G 1551 (or vehicle system tester V.A.G 1552) with cable V.A.G 1551/3

Work sequence

- Connect fault reader V.A.G 1551 (V.A.G 1552). Start engine and select "Address word" 01 of engine control unit. When doing this the engine must be running at idling speed.

Protected by copyright. Copyright by Volkswagen AG. Volkswagen AG does not guarantee or accept any liability with respect to the correctness of information in this document. Copyright by Volkswagen AG. Reproduction or in whole is not permitted unless authorised by Volkswagen AG.
satelettronica

(Connecting fault reader and selecting engine control unit => Page 2 .)

Only when engine does not start:

- Switch ignition on.

- Switch on fault reader printer with the print key. The warning lamp in key must light up.

-> Indicated on display:

```
Rapid data transfer      HELP
Select function XX
```

- Operate fault reader taking into account the information on the display:
- Press keys 0 and 2 for function "Interrogate fault memory" and confirm entry with Q key.

-> The number of faults stored or "No fault recognised!" will be shown on the display.

```
X Faults recognised!
```

If one or more faults are stored:

The stored faults will be displayed and printed out one after the other.

-> After the stored faults have been printed out, the display will show:

```
Rapid data transfer      HELP
Select function XX
```

- Press keys 0 and 5 for the function "Erase fault memory" and confirm entry with Q key.

Note:

If the ignition is switched off between "Interrogate fault memory" and "Erase fault memory" the fault memory will not be erased.

-> Indicated on display:

```
Rapid data transfer
Fault memory is erased!
```

- Press the ⇒key.
- Press keys 0 and 6 for the function "End output" and confirm entry with the Q key.
- Eliminate the printed out faults using the appropriate fault table.
  => Page 5 .

During test and assembly work faults can be recognised from other control units like e.g. plug disconnected. Therefore on completion the fault memories of all control units must be interrogated and erased. To do this:

- Press key 0 twice for address word "Automatic test sequence" and confirm entry with Q key. The V.A.G 1551 transmits all known address words one after the other.

When a control unit answers with its identification the number of stored faults appears on the display or "No fault recognised".

Any system faults that are stored will be displayed one after the other and printed out. The V.A.G 1551 will then transmit the next address word.

-> The automatic test sequence has ended when following is indicated on display:

```
V.A.G SELF-DIAGNOSIS     HELP
1 - Rapid data transfer*
2 - Flash code output*
```

- Erase all fault memories and then carry out a road test.

  During the road test the following operating conditions must be fulfilled:
  - The coolant temperature must exceed 80 °C .
  - When the temperature is reached, the operating conditions

Reproduction of this document or part of it is not permitted without authorised by Volkswagen AG. Volkswagen AG does not guarantee or accept any liability with respect to the correctness of information in this document. Copyright by Volkswagen AG.
For private or commercial purposes, in part or on whole, is not permitted unless authorised by Volkswagen AG. Copyright by Volkswagen AG.
satelettronica

Idling
Part throttle
Full throttle
Overrun
must be attained several times.
- At full throttle the speed must exceed 3500 rpm.

- Again interrogate the fault memories of all control units using the "automatic test sequence".

If no fault is stored:

- Press the ⇒key.

-> Indicated on display:

```
Rapid data transfer      HELP
Select function XX
```

- Press keys 0 and 6 for the function "End output" and confirm entry with the Q key.

Note:

If the self-diagnosis has not detected a fault, use the appropriate fault table in "Fault finding engine" binder for further fault finding.

1.6 - Fault table

Notes:

- The fault tables are listed according to the 5 digit fault code on the left.
- Explanation of the fault types (e.g. "open circuit/short circuit to earth"):

=> Fault reader operating instructions

- If components are indicated as faulty:
  First check the wiring and connectors to these components as well as the system earth connections according to current flow diagram. This is particularly relevant if faults are output as "occurring sporadically" (SP).

V.A.G 1551 print-out	Possible causes of fault	Possible effects	Fault remedy
No fault recognized!	If a complaint exists: Fault not recognised during self-diagnosis	---	Continue fault finding according to fault table, in "Engine fault finding" binder.

V.A.G 1551 print-out	Possible causes of fault	Possible effects	Fault remedy
00282 Throttle valve positioner - V601) Output does not switch/ short to earth	- Wire(s) to positioning motor, short to earth	- Cold starting problem - Cold idling speed problems	- Check V60 =>Page 38 , Checking throttle valve control part
Output does not switch/ short to positive	- Wire(s) to positioning motor, short to battery positive - Wire(s) open circuit - Idling speed control control limit exceeded	- Hard load changes - Idling speed problems0	

satelettronica

V.A.G 1551 print-out	Possible causes of fault	Possible effects	Fault remedy
Short circuit	- Short between wiring to positioning motor - Short in positioning motor		

1) The throttle valve positioner (V60) is a component of the throttle valve control part (J338).

V.A.G 1551 print-out	Possible causes of fault	Possible effects	Fault remedy
00516 Idling switch -F601) Short to earth	- Wire short to earth - F60 defective	- Idling speed problems - Driving characteristic problems when driving off	- Perform basic setting =>Page 32 - Check F60 =>Page 38 , checking throttle valve control part
Open circuit/short to positive	- Wiring open circuit in earth wire - Wire short to positive - F60 defective		
00518 Throttle valve potentiometer -G692) Short to earth	- Wire short to earth - G69 defective	- Poor throttle response - Hard load changes - Increased emission values - No full throttle recognition - Loss of output and torque	- Perform basic setting =>Page 38 , Checking throttle valve control part
Open circuit/short to positive	- Wiring open circuit in earth wire - Wire short to positive - G69 defective		

1) The idling speed switch (F60) is a component of the throttle valve control part (J338).

2) The throttle valve potentiometer (G69) is a component of the throttle valve control part (J338).

V.A.G 1551 print-out	Possible causes of fault	Possible effects	Fault remedy
00519 Intake manifold pressure sender -G71 Short to earth	- Wire short to earth - G71 defective	- Increased emission values - Poor throttle response - Hard load changes	- Check G71 =>Page 44
Open circuit/short to positive	- Wire open circuit in earth wire - Wire short to positive - G71 defective		
Signal too small	- G71 defective	- Increased emission values - Poor throttle response - Engine running problems	- Renew G71
Signal too large	- G71 defective		

V.A.G 1551 print-out	Possible causes of fault	Possible effects	Fault remedy
00522 Coolant temperature sender -G62 Short to earth	- Wire short to earth - G62 defective	- Poor cold starting - Poor hot starting - No idling speed adaption - Increased emission values - Increased fuel consumption	- Check G62 =>Page 47

Protected by copyright. Copying for private or commercial purposes, in part or in whole, is not permitted unless authorised by Volkswagen AG. Volkswagen AG does not guarantee or accept any liability with respect to the correctness of information in this document. Copyright by Volkswagen AG.
satelettronica

V.A.G 1551 print-out	Possible causes of fault	Possible effects	Fault remedy
Open circuit/short to positive	- Wire open circuit in earth wire - Wire short to positive - G62 defective	- Poor hot starting - Increased emissions values	
00523 Intake air temperature sender - G42 Short to earth	- Wiring has short to earth - G42 defective	- Poor hot starting - Increased emissions values	- Check G42 =>Page 49
Open circuit/short to positive	- Wire open circuit in earth wire - Wire short to positive - G42 defective		

V.A.G 1551 print-out	Possible causes of fault	Possible effects	Fault remedy
00524 Knock sensor 1 -G61 Open circuit/short to earth	- Wire open circuit or short to earth - G61 defective	- Ignition timing retarded approx. 12 < ° - Reduced output - Increased fuel consumption	- Check G61 => Page 75
00525 Lambda probe -G39 no signal	- Wire open circuit - G39 defective	- No Lambda control - Fuel odours - Increased fuel consumption	- Check Lambda probe and Lambda control =>Page 33
Short to earth	- Wire short to earth - G39 defective	- Engine running problems - Increased emission values	
Short to positive	- Wire short to positive - G39 defective		

=> Current flow diagrams, Electrical fault finding and Fitting locations binder

V.A.G 1551 print-out	Possible causes of fault	Possible effects	Fault remedy
00530 Throttle valve positioner/potentiometer -G881) Open circuit/short to positive	- Wire open circuit in earth wire - Wire short to positive - G88 defective	- Cold starting problems - Idling speed not within tolerances - Cold idling problems - Uneven idling speed	- Check G88 =>Page 38 , checking throttle valve control part
Short to earth	- Wiring has short to earth - G88 defective		
00532 Supply voltage Signal too large	- Battery voltage above 16 V	---	- Check alternator
Signal too small	- Battery voltage below 10 V	- Idling speed is increased	- Check battery charge condition

1) The throttle valve positioner/potentiometer (G88) is a component of the throttle valve control part (J338).

V.A.G 1551 print-out	Possible causes of fault	Possible effects	Fault remedy
00533			

Copyright by Volkswagen AG. Volkswagen AG does not guarantee or accept any liability with respect to the correctness of information in this document. Copyright by Volkswagen AG. Copy only for private use. Not permitted uses authorised by Volkswagen AG. Volkswagen AG does not guarantee or accept any liability with respect to the correctness of information in this document. Copyright by Volkswagen AG. Copy only for private use. Not permitted uses, in part or whole, for commercial purposes or other than private use.

satelettronica

V.A.G 1551 print-out	Possible causes of fault	Possible effects	Fault remedy
Idling speed control Control limit exceeded	- Wire open circuit to throttle valve positioner -V60 - Upper or lower idling speed limit reached - V60 stuck	- Idling speed not within tolerances	- Check V60 =>Page 38 , checking throttle valve control part
Adaption limit exceeded	- Throttle valve housing of throttle valve control part dirty	- Idling speed not within tolerances	- Clean throttle valve control part throttle valve housing
Adaption limit not reached	- Intake system leaking	- Idling speed not within tolerances	- Check intake system for leaks (unmetered air) => Page 61

V.A.G 1551 print-out	Possible causes of fault	Possible effects	Fault remedy
00537 Lambda control Control limit exceeded	- Exhaust system between cylinder head and catalyst leaking	- Increased emission values - Increased fuel consumption - Engine running problems	- Check exhaust system: => Repair group 26; Removing and installing parts of exhaust system
	- Misfiring		- Check components of ignition part => Page 65
	- Injector(s) (N30...N33) defective		- Check N30...N33 => Page 56 , check injectors
	- Fuel pressure too low		- Check fuel pressure regulator => Page 58
	- Insufficient fuel in fuel tank		- Fill with fuel
Continued on next page	- Intake system leaking		- Check intake system for leaks (unmetered air) => Page 61
V.A.G 1551 print-out Continued	Possible causes of fault	Possible effects	Fault remedy
	- Solenoid valve1 for activated charcoal filter (N80) stuck (always open)		- Check N80 => Page 10 , Final control diagnosis
	- Lambda probe (G39) defective		- Check Lambda probe and Lambda control =>Page 33
Control limit not attained	- Fuel pressure too high	- Increased emission values - Engine running problems	- Check fuel pressure regulator => Page 58
	- Injector(s) (N30...N33) defective		- Check N30...N33 => Page 56 , checking injectors
	- Lambda probe (G39) defective		- Check Lambda probe and Lambda control =>Page 33
00543 Maximum revs exceeded	- Speed above 6520 rpm (e.g. selector fault)	- Possible damage to valves and pistons (contact)	- Check engine for damage and erase fault memory

V.A.G 1551 print-out	Possible causes of fault	Possible effects	Fault remedy
00561 Mixture adaptation			

Copyright by Volkswagen AG. Not permitted unless authorised by Volkswagen AG. Volkswagen AG does not guarantee or accept any liability with respect to the correctness of information in this document. Copyright by Volkswagen AG. Copying for private or commercial purposes, in part or in whole is not permitted unless authorised by Volkswagen AG. Volkswagen AG does not guarantee or accept any liability with respect to the correctness of information in this document. Copyright by Volkswagen AG.
satelettronica

V.A.G 1551 print-out	Possible causes of fault	Possible effects	Fault remedy
Adaption limit (+) exceeded	As 00537, Lambda control But for fault finding the following must be observed: - Faults in Lambda control are recognized after a brief change to the system, e.g. disconnected vacuum hose. - Faults in mixture adaption are only recognized after a long period of change to the system, e.g. wear of individual components.		
Adaptation limit (+) not reached			
Adaptation limit (x) exceeded			
Adaptation limit (x) not reached			
00625 Speed signal implausible signal	- No signal from speed sensor (G21) or speedometer sender (G22)	- Speedometer display not OK. - Engine running problems	- Check signal from G21 or G22 =>Page 45 , Checking speed signal

V.A.G 1551 print-out	Possible causes of fault	Possible effects	Fault remedy
01087 Basic setting not completed Fault in basic setting	- The engine control unit is not matched to throttle valve control part - The basic setting has not been carried out to completion, because e.g. during the operation the starter has been operated or throttle valve sticks	- Idling speed not within tolerances - Idling speed fluctuates	- Perform basic setting =>Page 32
01247 Activated charcoal filter solenoid valve 1 -N80 defective	- N80 defective - Wiring open circuit - Wiring short circuit	- Fuel odours	- Check N80 => Page 10 , Final control diagnosis
	- Hose from N80 to activated charcoal filter blocked		- Check hose
V.A.G 1551 print-out	**Possible causes of fault**	**Possible effects**	**Fault remedy**
01249 No.1 cyl. injector -N30 Short to positive	- Wire to control unit has short to battery positive - Injector defective, short circuit	- Increased emission values - Poor starting - Engine running problems	- Check N30...N33 => Page 56 , checking injectors
Short to earth	- Wire to control unit has short to earth	- Poor throttle response - Uneven idling speed	
Open circuit/short to positive	- Wire open circuit to control unit		
01250 No. 2 cyl. injector -N31 Short to positive	see fault code 01249, Cyl. 1		
Output on V.A.G 1551 printer	**Possible causes of fault**	**Possible effects**	**Fault remedy**
01251 No. 3 cyl. injector -N32			

Protected by copyright. Copying for private or commercial purposes, in part or in whole, is not permitted unless authorised by Volkswagen AG. Volkswagen AG does not guarantee or accept any liability with respect to the correctness of information in this document. Copyright by Volkswagen AG.

satelettronica

V.A.G 1551 print-out	Possible causes of fault	Possible effects	Fault remedy
Short to positive	see fault code 01249, Cyl. 1		
01252 No. 4 cyl. injector -N33 Short to positive	see fault code 01249, Cyl. 1		
Output on V.A.G 1551 printer	**Possible causes of fault**	**Possible effects**	**Fault remedy**
17978 Engine control unit blocked	- Attempted manipulation - Short in communication cable - Incorrect coding - Immobilizer control unit defective/missing	- Engine starts briefly and then stops again	- Adapt engine control unit to electronic immobilizer => Page 53 Check electronic immobilizer: => Repair group 96; Servicing electronic immobilizer
65535 Control unit defective	- Control unit internally defective - Attempted manipulation of control unit	- Engine running problems - Engine will not start/ stopped	- Renew J220 => Page 25 , item 29

1.7 - Final control diagnosis

The final control diagnosis activates the activated charcoal filter solenoid valve 1.

Special tools, testers, measuring instruments and auxiliary items required

- Fault reader V.A.G 1551 or vehicle system tester V.A.G 1552 with cable V.A.G 1551/3
- Test box V.A.G 1598/18
- Hand multimeter V.A.G 1526 or multimeter V.A.G 1715
- Diode test lamp V.A.G 1527
- Adapter set V.A.G 1594
- Current flow diagram

Test conditions

- Fuse 15 and 21 OK.

Note:

If the final control diagnosis is to be repeated without the engine being started in between time, switch ignition off for approx. 20 seconds.

Work sequence

- Connect the fault reader V.A.G 1551 (V.A.G 1552). Then switch ignition on and select engine control unit with the "Address word" 01.
  (Connecting fault reader and selecting engine control unit => Page 2 .)

-> Indicated on display:

```
Rapid data transfer      HELP
Select function XX
```

- Operate fault reader taking into account the information on the display:
- Press keys 0 and 3 for the function "Final control diagnosis".

-> Indicated on display:

Copyright by Volkswagen AG. Volkswagen AG does not guarantee or accept any liability with respect to the correctness of information in this document. Copyright by Volkswagen AG. Copying for private or commercial purposes, in part or in whole, is not permitted unless authorised by Volkswagen AG.
satelettronica

```
Rapid data transfer     Q
03 Final control diagnosis
```

- Confirm input with Q key.

-> Indicated on display:

```
Final control diagnosis
Activ. charcoal filter solenoid valve
1     -N80
```

The solenoid valve (right suspension turret) must click.

- Pull hose off activated charcoal filter at solenoid valve.
- Connect an auxiliary hose to the vacant valve connection.

- Blow into auxiliary hose during final control diagnosis (in direction of throttle valve control part).
  Valve must open and close

If the solenoid valve clicks, opens and closes:

- Press ⇒key.

-> Indicated on display:

```
Rapid data transfer     HELP
Select function XX
```

- Press keys 0 and 6 for the function "End output" and confirm entry with the Q key.
- Switch off ignition.

If the solenoid valve does not click:

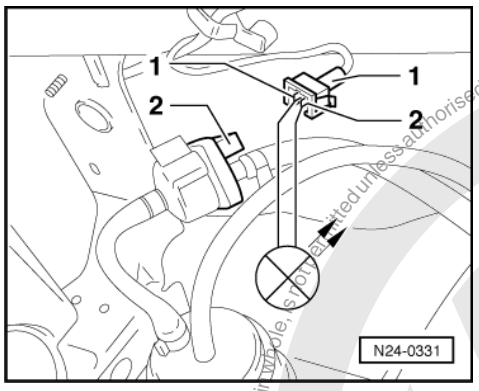

- -> Pull connector -1- off solenoid valve -2- and connect diode test lamp V.A.G 1527 with aux. cables from V.A.G 1594 to disconnected connector.
  The LED must flash (bright/darker)

LED flashes:

- Press ⇒key.
- Press keys 0 and 6 for the function "End output" and confirm entry with the Q key.
- Switch off ignition.
- Renew solenoid valve -2-.

=> Repair group 20; Removing and installing parts of activated charcoal filter system Removing and installing parts of activated charcoal filter system

LED does not flash:

- Press ⇒key.
- Press keys 0 and 6 for the function "End output" and confirm entry with the Q key.

Protected by copyright. Copying for private or commercial purposes, in part or in whole, is not permitted unless authorised by Volkswagen AG. Volkswagen AG does not guarantee or accept any liability with respect to the correctness of information in this document. Copyright by Volkswagen AG.
satelettronica

- Switch off ignition.

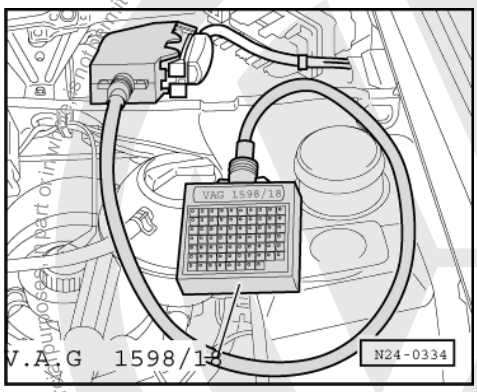

- -> Connect test box V.A.G 1598/18 to control unit wiring loom.
- Check wire for open circuit between test box sockets 3 and 2 pin connector contact 1, according to current flow diagram.
  Wire resistance: max. 1.5 ω
- Additionally check wire for short to battery positive and earth.
  Specification: ∞ω
- Check wire between 2 pin connector contact 2 and relay plate for open circuit using to current flow diagram.
  Wire resistance: max. 1.5 ω

If no wiring fault is detected:

- Renew engine control unit
  => Page 25 , item 29

1.8 - Read measured value block and basic settings

The measured values in the functions read measured value block and basic setting are described during the individual component test. This table serves only as an overview.

Note:

To change to another display group proceed as follows:

Display group	V.A.G 1551	V.A.G 1552
Higher	Press key 3	Press ↑key
Lower	Press key 1	Press ↓key
Skip	Press key C	Press key C

1.9 - Display group overview

Display group 0 (decimal displayed value)

Test conditions
- Engine runs at idling speed
- The coolant temperature is at least 80 °C
- The electrical consumers are switched off

Display zones											Specification	Corresponds to
1	2	3	4	5	6	7	8	9	10	Engine speed	69...79	690...790 rpm
										Injection period	10...21	3.9...8.1 ms
										Throttle valve angle	8...15	3.6...6.3 <°
										Lambda probe status	0...4	---
										Lambda integrator	102...154	128 = Lambda 1

satelettronica

Display group 0 (decimal displayed value)		
Lambda probe signal	0...205	0...1.0 V
Engine load	40...68	2.0...3.4 ms
Coolant temperature	176...229	80...115 °C
Battery voltage	176...213	12.0...14.5 V
Intake air temperature	75...158	15...70 °C

1) Up-to-date specifications:

=> Exhaust emissions test binder

	Display zones			
	1	2	3	4
Display group 1				
Display	xxxxrpm	xx.x °C	x.x V	xxxxxxxx
Indicated	Engine speed	Coolant temperature	Lambda probe voltage	Adjustment conditions4)
Specification1)	690...7902)3)	80...115	0...1.0 fluctuating	00000000
Display group 2				
Display	xxxx rpm	xx.x ms	xx.x V	xx.x °C
Indicated	Engine speed	Injection period	Battery voltage	Intake air temperature
Specification1)	690...7902)3)	3.9...8.1	12.0...14.5 V	15...70

1) The specifications must be attained when:

- engine runs at idling speed,

- the coolant temperature is at least 80 °C and

- electrical consumers are switched off

2) The idling speed is increased by the control unit under the following conditions:

- When the battery voltage is too low: up to 870 rpm

- After longer full throttle drive and high temperatures: up to 870 rpm

- With air conditioning system switched on: up to approx. 900 rpm

3) Up-to-date specifications:

=> Exhaust emissions test binder

4) Significance of numbers in 8 digit number block => Page 15 .

	Display zones			
	1	2	3	4
Display group 3				
Display	xxxx rpm	xx.x ms	xx <°	xx.x V
Indicated	Engine speed	Engine load	Throttle valve angle	Voltage value for throttle valve opening from throttle valve potentiometer
Specification1)	690...7902)3)	2.0...3.4	3.6...6.3	---
Display group 4				
Display	xxxx rpm	xx.x ms	xxx km/h	xxxxxxxx
Indicated	Engine speed	Engine load	Speed	Operating condition4)

Protected by copyright. Copyright by Volkswagen AG. Volkswagen AG does not guarantee or accept any liability with respect to the correctness of information in this document. Copyright by Volkswagen AG. Reproduction, private or commercial purposes is not permitted unless authorised by Volkswagen AG.
satelettronica

	Display zones			
Specification1)	690...7902)3)	2.0...3.4	---	---

1) The specifications must be attained when:

- engine runs at idling speed,

- the coolant temperature is at least 80 °C and

- electrical consumers are switched off

2) The idling speed is increased by the control unit under the following conditions:

- When the battery voltage is too low: up to 870 rpm

- After longer full throttle drive and high temperatures: up to 870 rpm

- With air conditioning system switched on: up to approx. 900 rpm

3) Up-to-date specifications:

=> Exhaust emissions test binder

4) Significance of numbers in 8 digit number block => Page 15 .

	Display zones			
	1	2	3	4
Display group 5				
Display	xxxx rpm	xxx %	x.xx	x
Indicated	Engine speed	Activated charcoal filter solenoid valve 1 duty cycle	Activated charcoal filter solenoid valve 1 adaptation value	Activated charcoal filter solenoid valve 1 flushing rate
No specification for service departments				
Display group 6				
Display	x.xx	x.xx	x.x V	x.x V
Indicated	Mixture correction value	Mixture correction "learned" value	Throttle valve potentiometer voltage value for throttle valve opening	Value stored during basic setting for the throttle valve potentiometer position: Throttle valve closed
No specification for service departments				

	Display zones			
	1	2	3	4
Display group 7 = Display group 1				
Display group 8				
Display	x.x V	x.x V	x.x V	x.x V
Indicated	Actual value from throttle valve potentiometer	Throttle valve emergency running profile	Throttle valve control unit min. stop	Throttle valve control unit max. stop
No specification for service departments				
Display group 9				
Display	x.xx	x.xx	x.xx V	x.xx
Indicated	Lambda integrator	Lambda adaptation	Lambda adaptation	Lambda adaptation
No specification for service departments				

Protected by copyright. Copyright by Volkswagen AG. Volkswagen AG does not guarantee or accept any liability with respect to the correctness of information in this document. Copyright by Volkswagen AG. Protected by copyright. Copying for private or commercial purposes, in part or in whole, is not permitted unless authorised by Volkswagen AG.
satelettronica

Significance of figures in 8 digit number block

Significance when displayed digit = 1									
x	x	x	x	x	x	x	x	Adjustment conditions (display group 1)	Operating condition (display group 4)
1								Fault in fault memory	Overrun
	1							Not relevant	Idling speed
		1						Air conditioner switched on	Part load
			1					Idling switch open	Full load
				1				Fault in Lambda control	Acceleration enrichment
					1			Throttle valve open	Weakening delayed
						1		Speed above 2500 rpm	Air conditioner compressor switched on
							1	Coolant temperature below 80 °C	No. 1 cylinder recognized

Protected by copyright. Copying for private or commercial purposes, in part or in whole, is not permitted unless authorised by Volkswagen AG. Volkswagen AG does not guarantee or accept any liability with respect to the correctness of information in this document. Copyright by Volkswagen AG.

satelettronica

24 - Mixture preparation, Injection

1 - Servicing injection system

1.1 - Servicing injection system

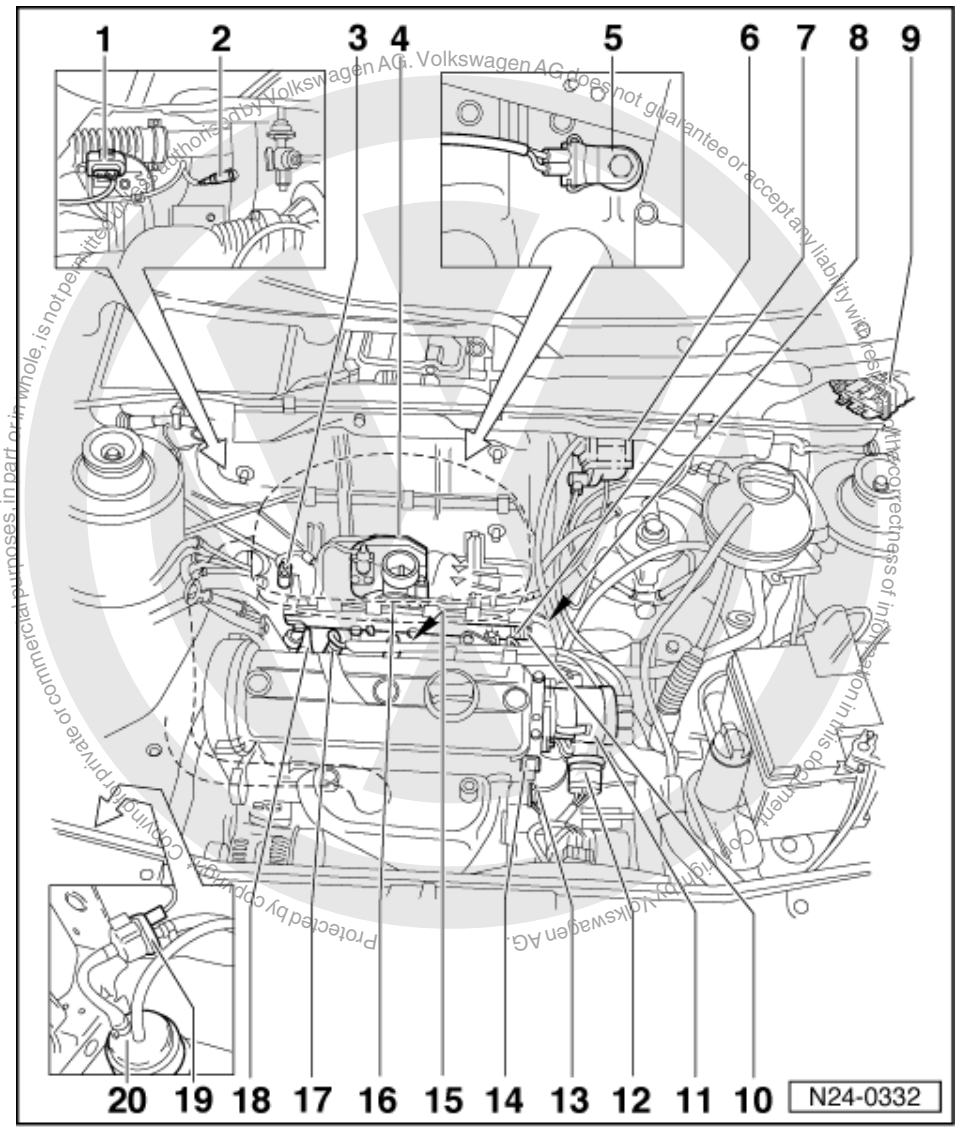

1.2 - Fitting locations overview

1 4 pin connector
- For Lambda probe (G39)

2 Lambda probe (G39), 55 Nm
- Location: In front exhaust pipe

3 Intake manifold pressure sender (G71) with intake air temperature sender (G42)

4 Throttle valve control part (J338)

5 Knock sensor 1 (G61)
- =>Page 68

satelettronica

6 Ignition transformer (N152)
- =>Page 66

7 Fuel rail

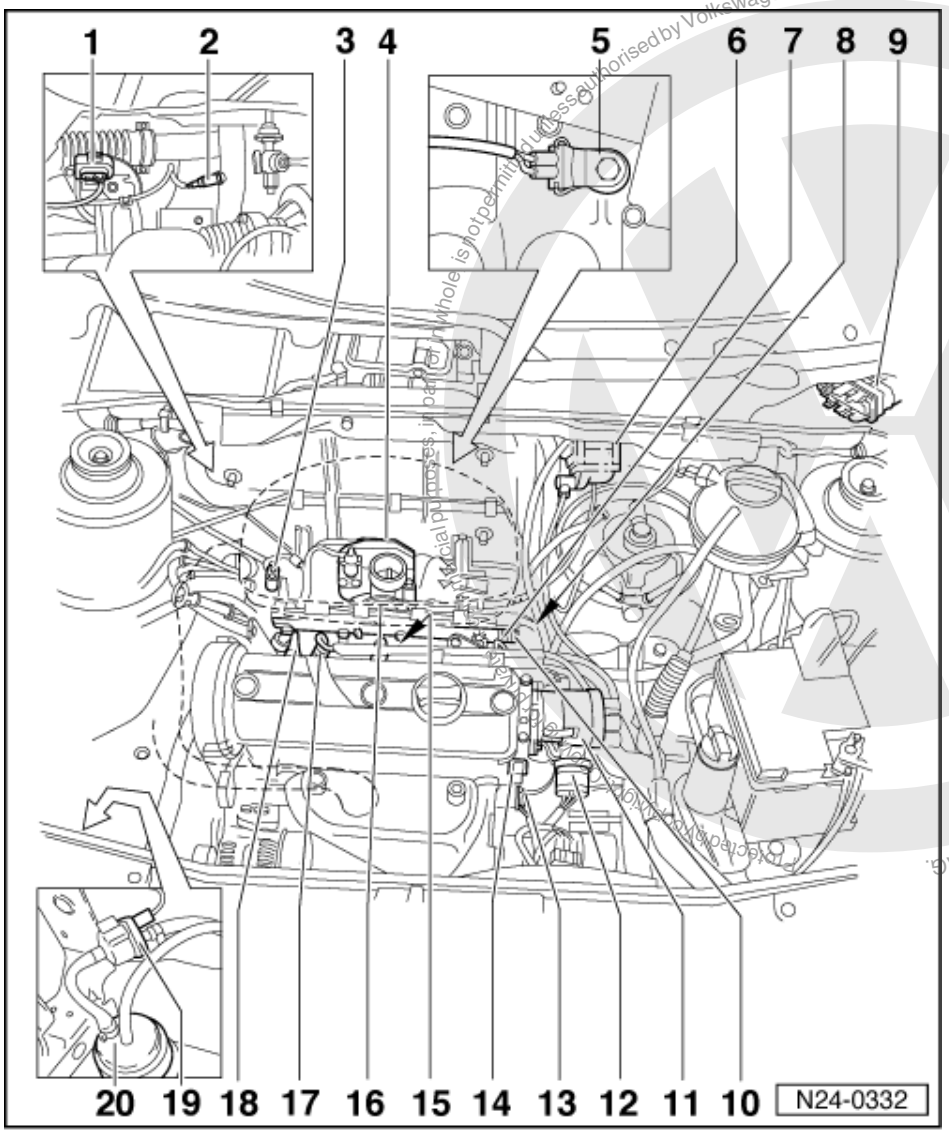

8 Earth connection

9 Engine control unit
(Motronic control unit -J220)

10 Fuel pressure regulator

11 Distributor
- =>Page 67

12 Central connector

13 Earth connection

14 Coolant temperature sender (G62)
- Identification: yellow ring

15 Injector (N30...N33)

16 Air cleaner

17 Spark plug, 25 Nm
- =>Page 70

satelettronica

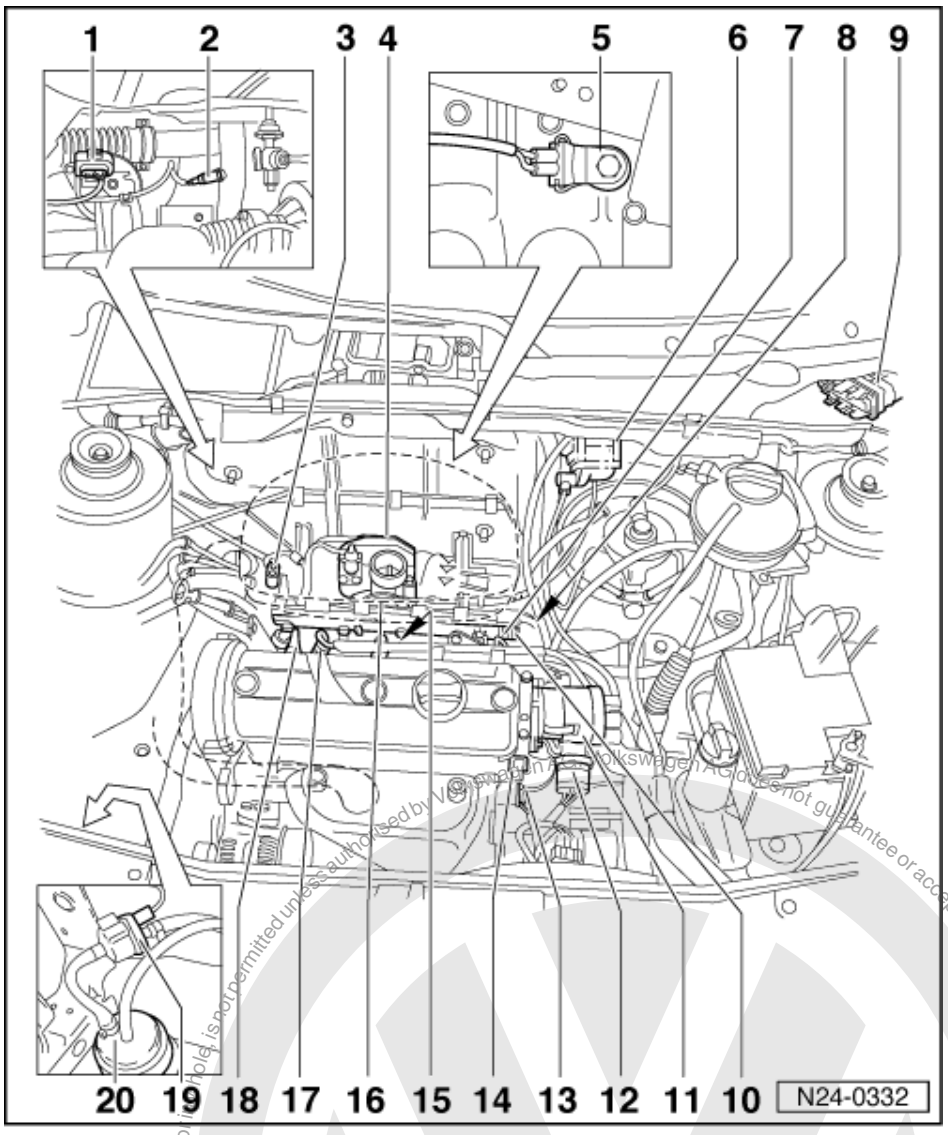

18 Oil pressure switch

19 Activated charcoal filter solenoid valve 1 (N80)

- Activated charcoal filter system

=> Repair group 20, removing and installing parts of the fuel supply system, removing and installing parts of the activated charcoal filter system

- Removing => Page 31 , Fig. 2

20 Activated charcoal filter

- In right-hand wheel housing
- Activated charcoal filter system

=> Repair group 20, removing and installing parts of the fuel supply system, removing and installing parts of the activated charcoal filter system

Protected by copyright. Copyright by Volkswagen AG.
Copying for private or commercial purposes, in part or in whole, is not permitted unless authorised by Volkswagen AG. Volkswagen AG does not guarantee or accept any liability with respect to the correctness of information in this document.
satelettronica

1.3 - General notes on injection

Servicing ignition part:

=> Repair group 28

Notes:

- The engine control unit is equipped with self-diagnosis. Before carrying out repairs and fault finding the fault memory must be interrogated. Also the vacuum hoses and connections must be checked (unmetered air).
- Components marked with * are checked via the self diagnosis
  => Page 3 , interrogating and erasing fault memory.
- For trouble-free operation of the electrical components a voltage of at least 11.5 V is necessary.
- Disconnecting and connecting the battery must only be done with the ignition switched off, otherwise the engine control unit could be damaged.
- If the engine starts, runs for a short period and then stops, after fault finding, repairs or component tests, then the fault may lie with the immobilizer which is blocking the engine control unit. The fault memory must be interrogated and if necessary the control unit matched => Page 53 .

- Do not use sealants containing silicone. Particles of silicone drawn into the engine, will not be burnt in the engine and damage the Lambda probe.
- During some checks it is possible that the control unit will recognise and store a fault. Therefore after completing all checks and repairs the fault memory must be interrogated and if necessary erased.
  => Page 3 , interrogating and erasing fault memory
- Always renew spring-type hose clips with screw-type hose clips.

Safety precautions =>Page 31

Rules for cleanliness => Page 32

Technical data => Page 32

Checking intake system for leaks (unmetered air) => Page 61

Protected by copyright. Copyright for private or commercial purposes, in part or in whole, is not permitted unless authorised by Volkswagen AG. Volkswagen AG does not guarantee or accept any liability with respect to the correctness of information in this document. Copyright by Volkswagen AG.

satelettronica

1.4 - Removing and installing parts of the injection system

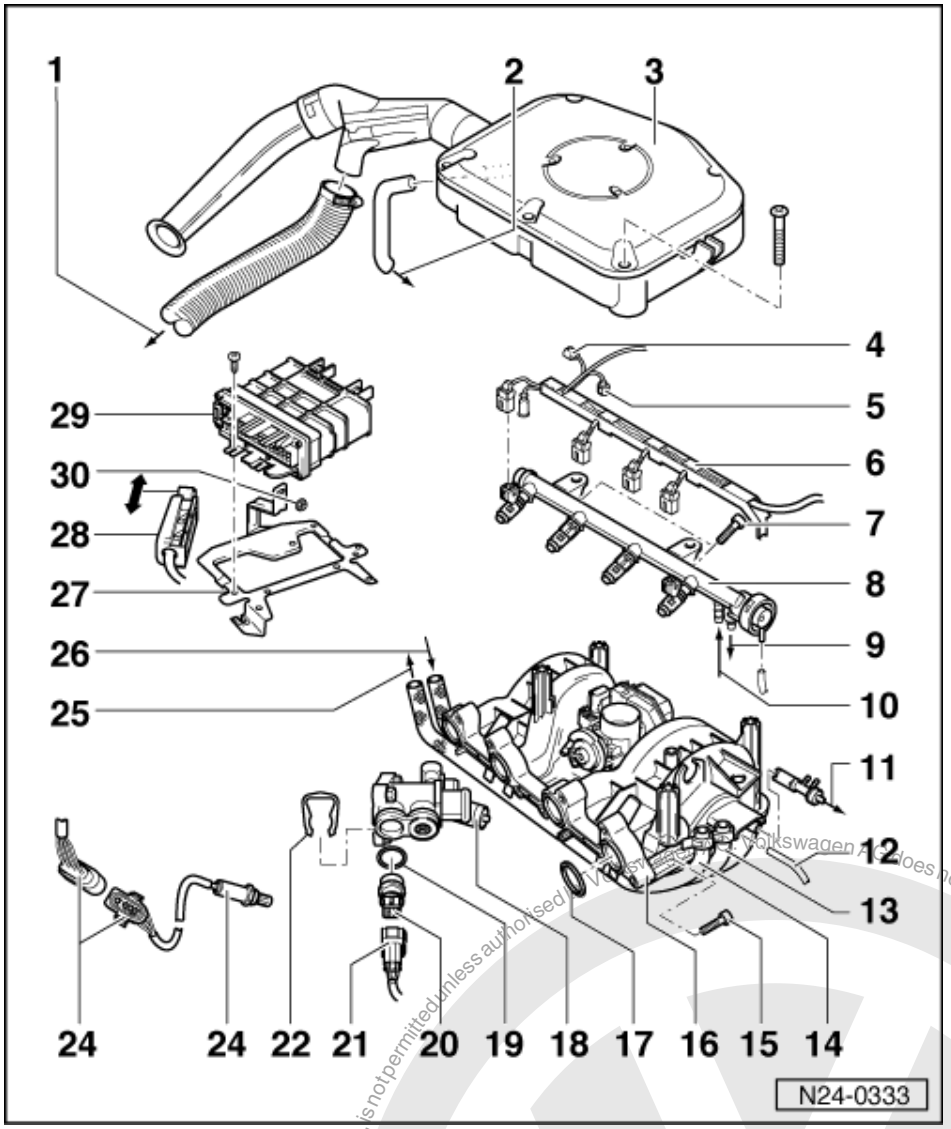

1 To warm air intake
- To warm air collecting plate on exhaust manifold

2 To oil separator

3 Air cleaner
- Removing => Page 31 , Fig. 2
- Dismantling and assembling => Page 29

4 Connector
- 4-pin
- For intake manifold pressure sender (G71) with intake air temperature sender (G42)

5 Connector
- 8 pin
- For throttle valve control part (J338)

Protected by copyright. Copying for private or commercial purposes, in part or in whole, is not permitted unless authorised by Volkswagen AG. Volkswagen AG does not guarantee or accept any liability with respect to the correctness of information in this document. Copyright by Volkswagen AG.
satelettronica

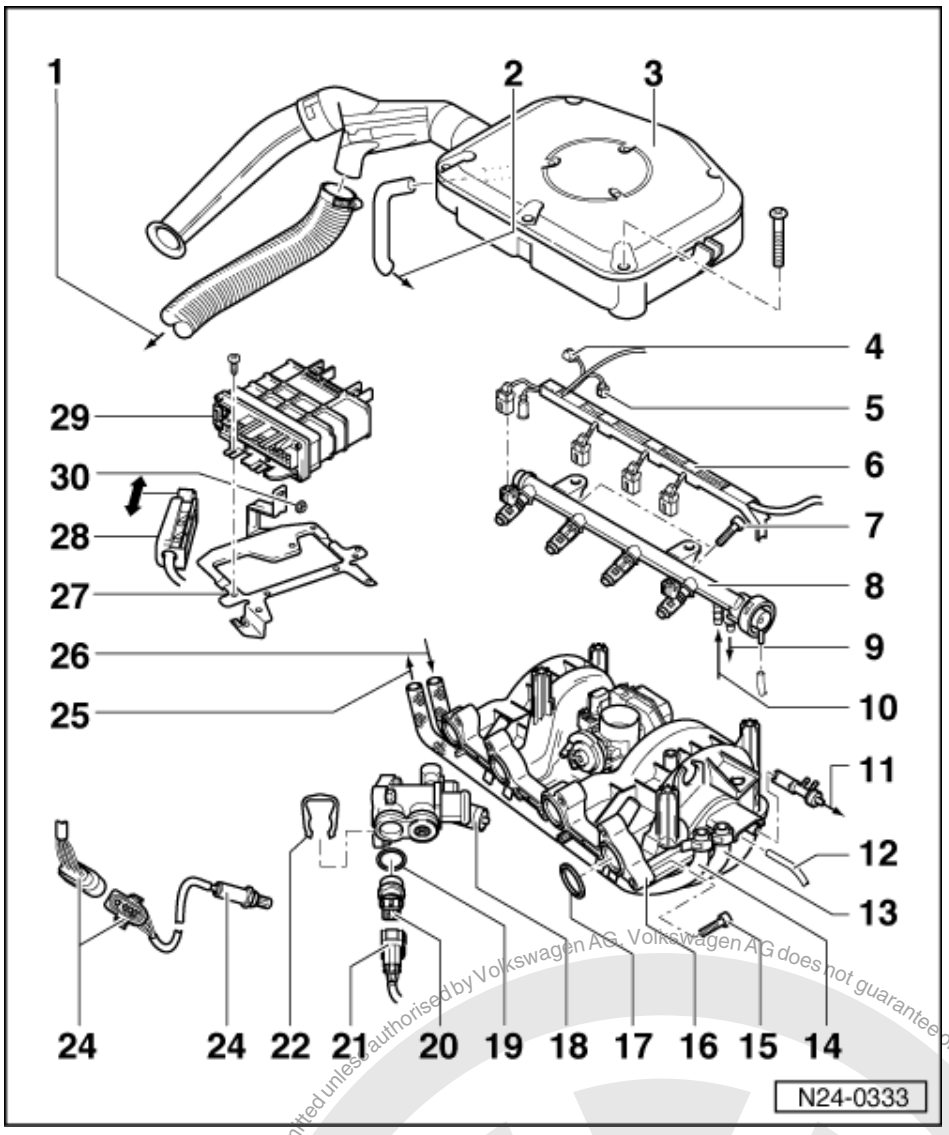

6 Cable guide
- Clipped on fuel manifold

7 10 Nm

8 Fuel rail with injectors
- Dismantling and assembling => Page 26

9 Return hose connection

10 Supply hose connection

11 To brake servo

12 Vacuum hose

13 Supply hose
- Secure with spring-type clips on fuel manifold
- Black or white markings

satelettronica
Protected by copyright. Copying for private or commercial purposes, in part or in whole, is not permitted unless authorised by Volkswagen AG. Volkswagen AG does not guarantee or accept any liability with respect to the correctness of information in this document. Copyright by Volkswagen AG.

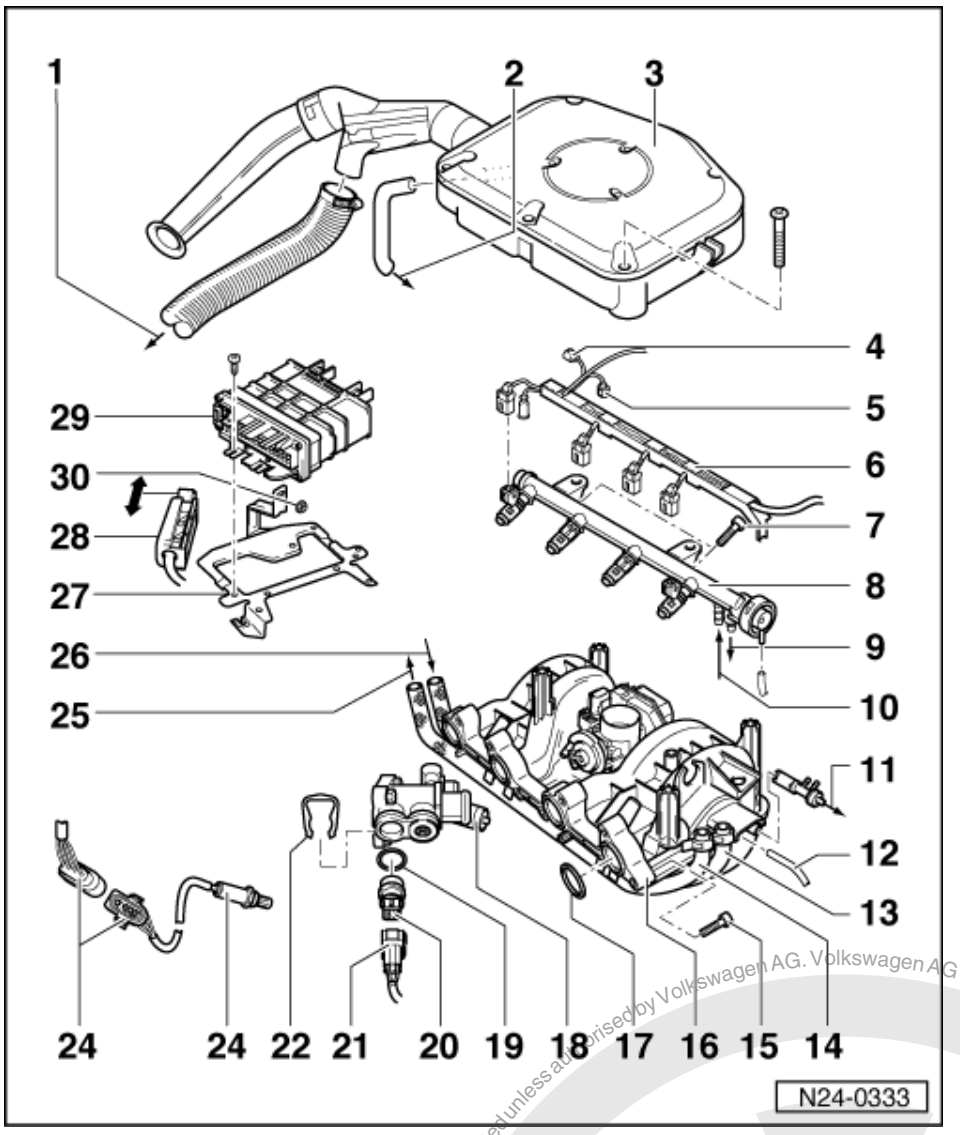

14 Return hose
- Secure with spring-type clips on fuel manifold
- Blue or blue markings

15 20+1 Nm
- Tighten bolts from inside to outside
- Ensure tightening torque is correct, otherwise the intake manifold bushes will work into the cylinder head

16 Intake manifold
- Dismantling and assembling => Page 27

17 O ring
- Renew

18 Thermostat housing

19 O ring
- Renew if damaged

Protected by copyright. Copying for private or commercial purposes, in part or in whole, is not permitted unless authorised by Volkswagen AG. Volkswagen AG does not guarantee or accept any liability with respect to the correctness of information in this document. Copyright by Volkswagen AG.
satelettronica

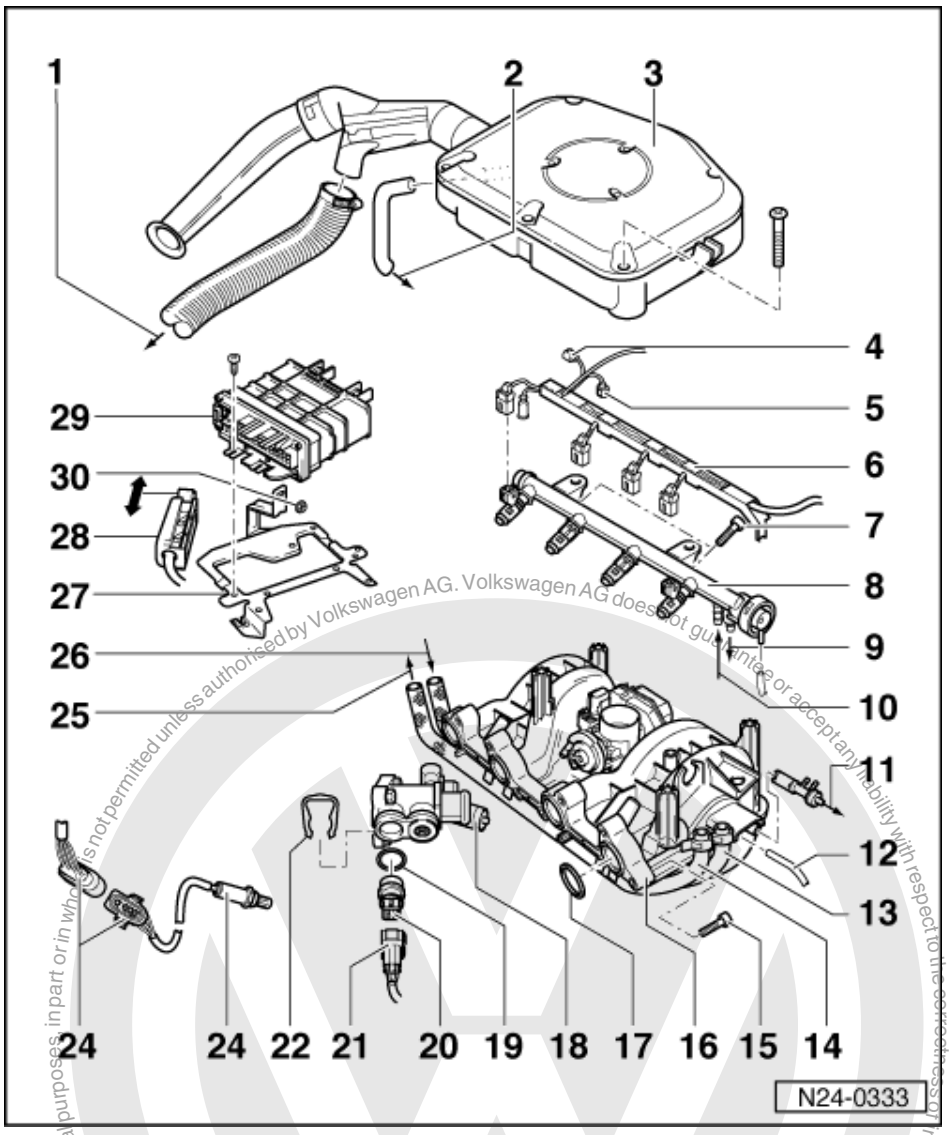

20 Coolant temperature sender (G62)*

- With coolant temperature gauge sender (G2)
- Identification: yellow ring
- If necessary release pressure in cooling system before removing
- Checking =>Page 47
- Resistance graph
  =>Page 31 , Fig. 1

21 Connector

22 Retaining clip

23 Lambda probe (G39)*, 55 Nm

- Location: In front exhaust pipe
- Grease only the threads with "G5"; "G5" must not get into the slots on the probe body
- Checking Lambda probe and Lambda control
  => Page 33

satelettronica

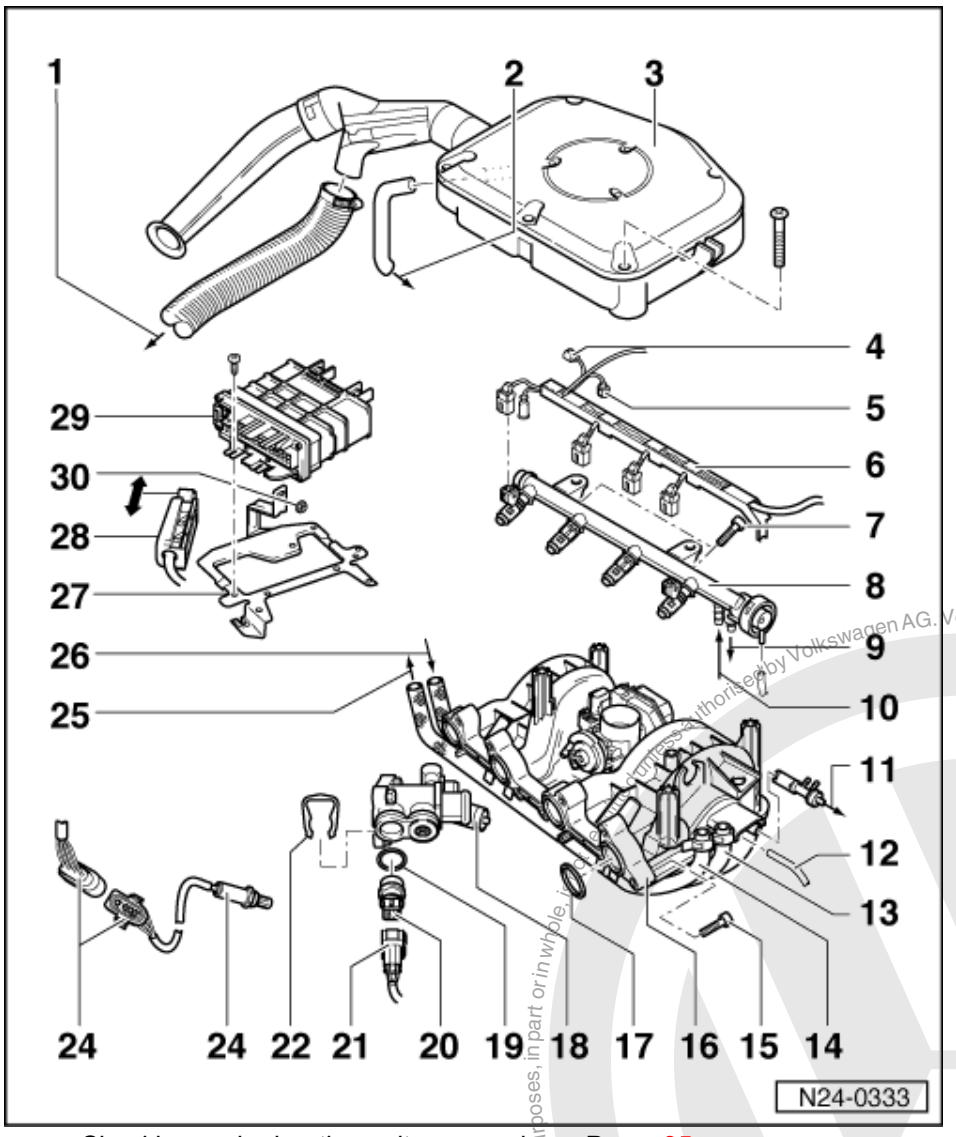

- Checking probe heating voltage supply => Page 35
- Check probe heating for continuity

24 4 pin connector
- For Lambda probe and Lambda probe heating
- Secured to rear engine mounting on right, in direction of travel

25 To fuel tank

26 From fuel supply unit in fuel tank

27 Securing plate

28 Connector
- Only disconnect or connect with ignition switched off

Protected by copyright. Copying for private or commercial purposes, in part or in whole, is not permitted unless authorised by Volkswagen AG. Volkswagen AG does not guarantee or accept any liability with respect to the correctness of information in this document. Copyright by Volkswagen AG.
satelettronica

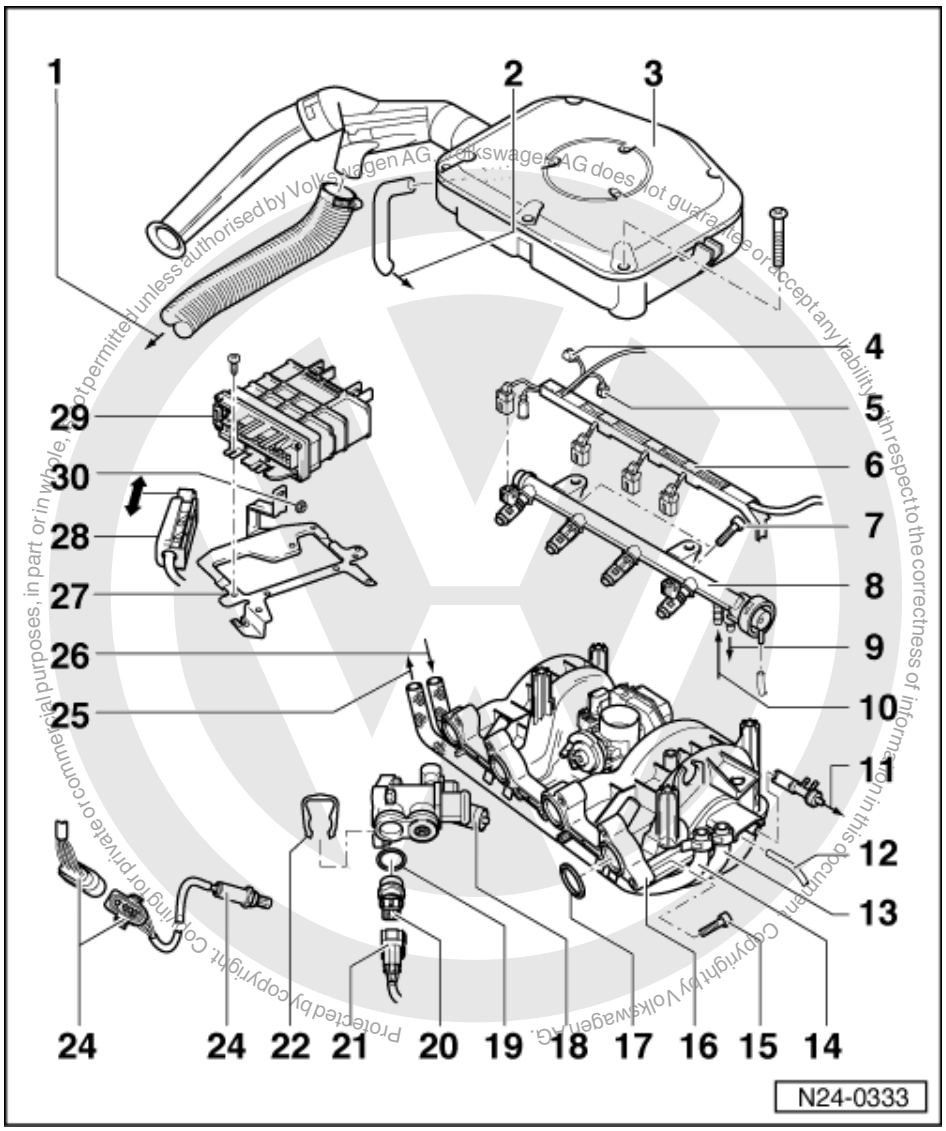

29 Engine control unit*

(Motronic control unit -J220)

- For injection system, Lambda regulation, activated charcoal filter solenoid valve, knock control, governed speed, ignition and self-diagnosis
- Location: in plenum chamber, right
- Checking voltage supply => Page 52

If the control unit is replaced:

- Perform basic settings => Page 32
- Match control unit to electronic immobilizer => Page 53

30 10 Nm

satelettronica

1.5 - Dismantling and assembling fuel rail with injectors

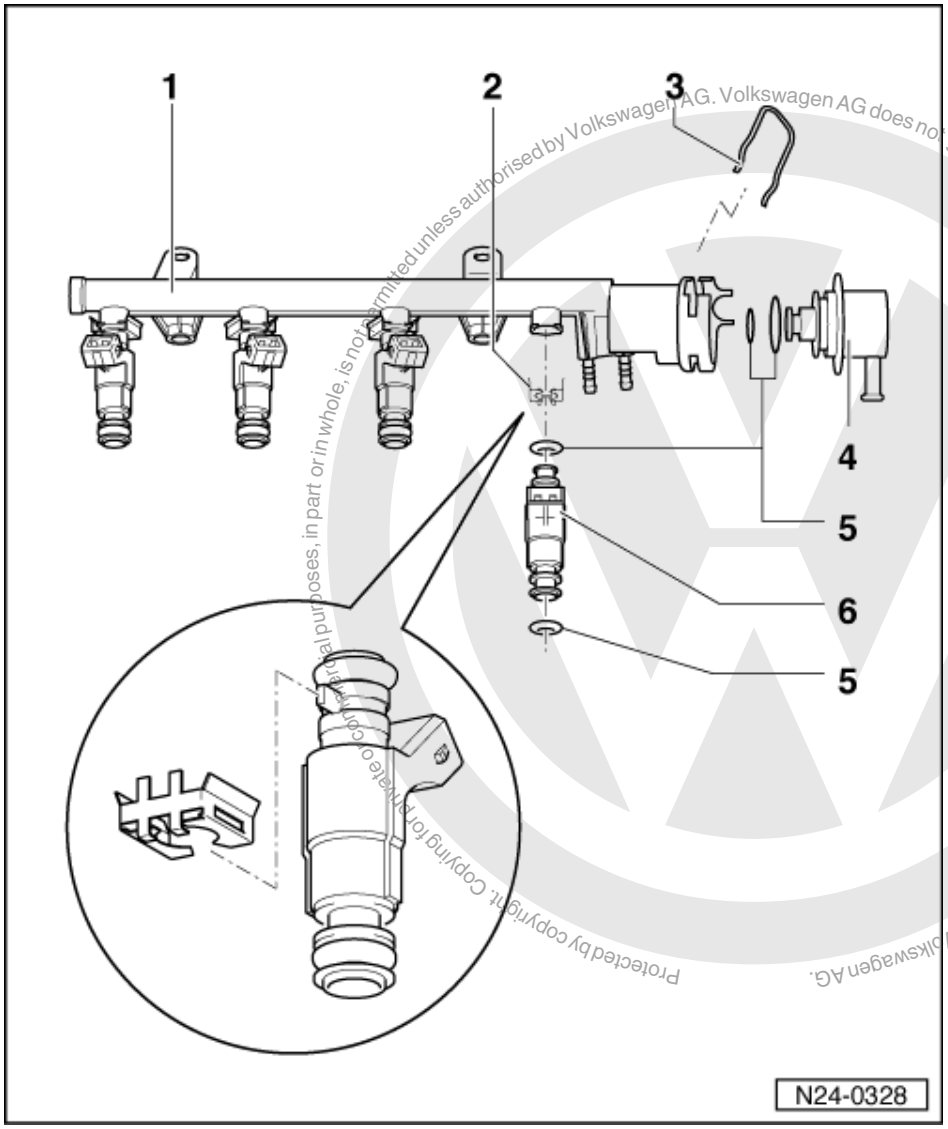

Protected by copyright. Copying for private or commercial purposes, in part or in whole, is not permitted unless authorised by Volkswagen AG. Volkswagen AG does not guarantee or accept any liability with respect to the correctness of information in this document. Copyright by Volkswagen AG.

satelettronica

1 Fuel manifold

2 Retaining clip
- Ensure seated correctly at injector and fuel rail

3 Retaining clip

4 Fuel pressure regulator
- Checking fuel pressure regulator and holding pressure => Page 58

5 O ring
- Renew if damaged

6 Injectors (N30...N33)*
- Checking => Page 56
- Resistance 14...17 ω

1.6 - Dismantling and assembling intake manifold

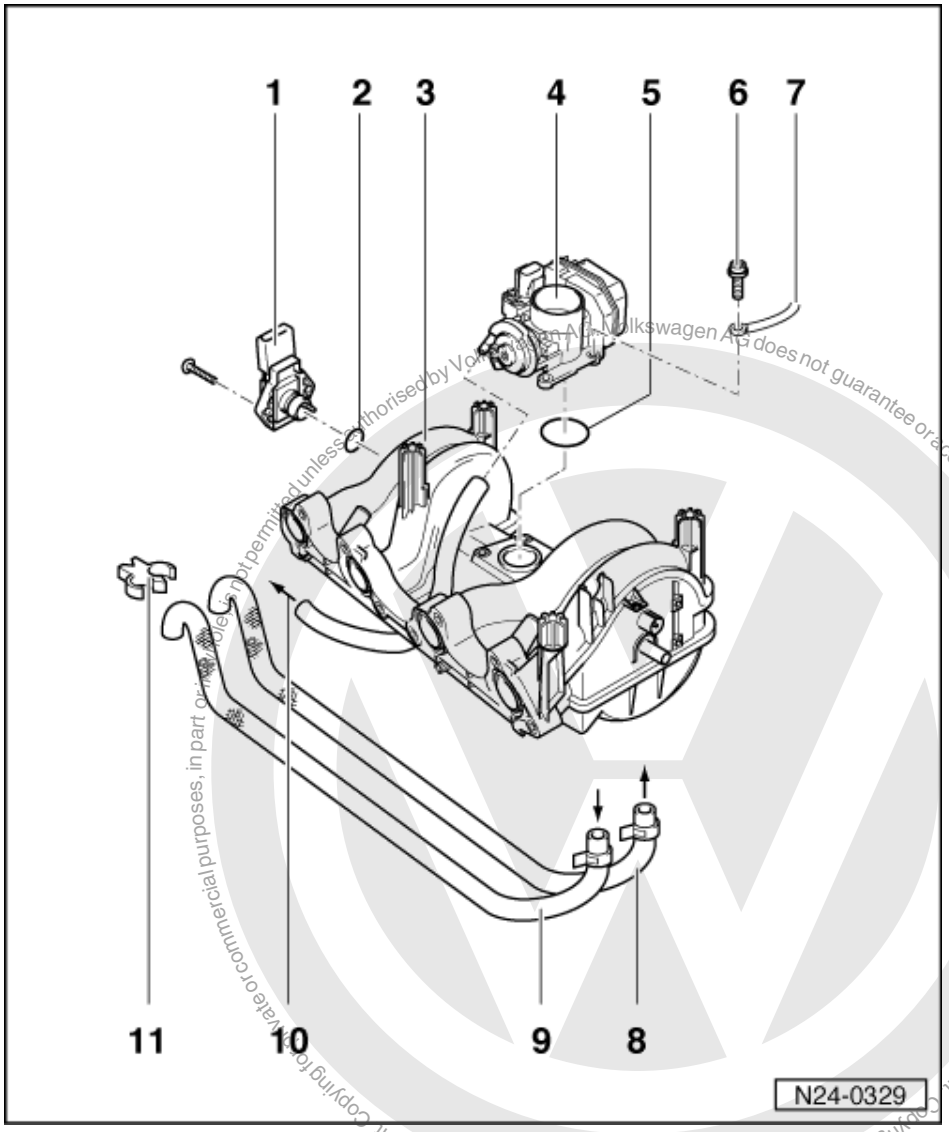

1 Intake manifold pressure sender (G71)* with intake air temperature sender (G42)*
- Resistance values for intake air temperature sender
  =>Page 31 , Fig. 1

2 O ring
- Renew if damaged

3 Intake manifold

4 Throttle valve control part (J338)*
- Checking => Page 38
- Components of the throttle valve control part (J338):
  Throttle valve positioner (V60), throttle valve potentiometer (G88), throttle valve potentiometer (G69) and idling switch (F60)
  If the control unit is replaced:
- Perform basic settings => Page 32

satelettronica

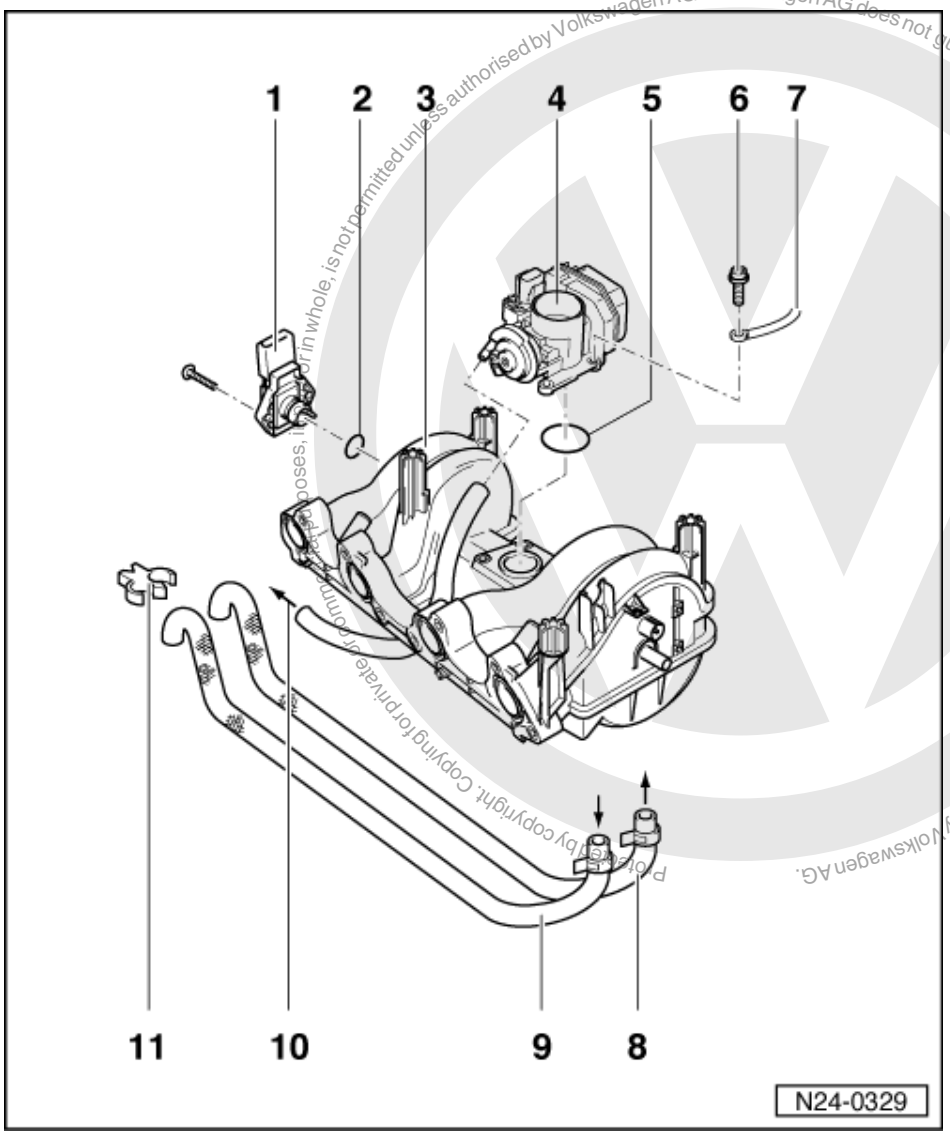

Polo Estate 1998 ➤ Motronic injection and ignition system - Edition 11.1995 Copyright by Volkswagen AG. Volkswagen AG does not guarantee or accept any liability with respect to the correctness of information in this document. Copyright by Volkswagen AG. Copyright by Volkswagen AG. Copyright. Copying for private or commercial purposes, in part or in whole, is not permitted unless authorised by Volkswagen AG.

5 O ring
- Renew if damaged

6 10 Nm

7 Earth wire
- For throttle valve control part

8 Supply hose
- Clip in lower intake manifold

9 Return hose
- Clip in lower intake manifold

10 To activated charcoal filter solenoid valve 1 (N80)
- Activated charcoal filter system

=> Repair group 20, removing and installing parts of the fuel supply system, removing and installing parts of the activated charcoal filter system

11 Retaining clip

satelettronica

1.7 - Dismantling and assembling air cleaner

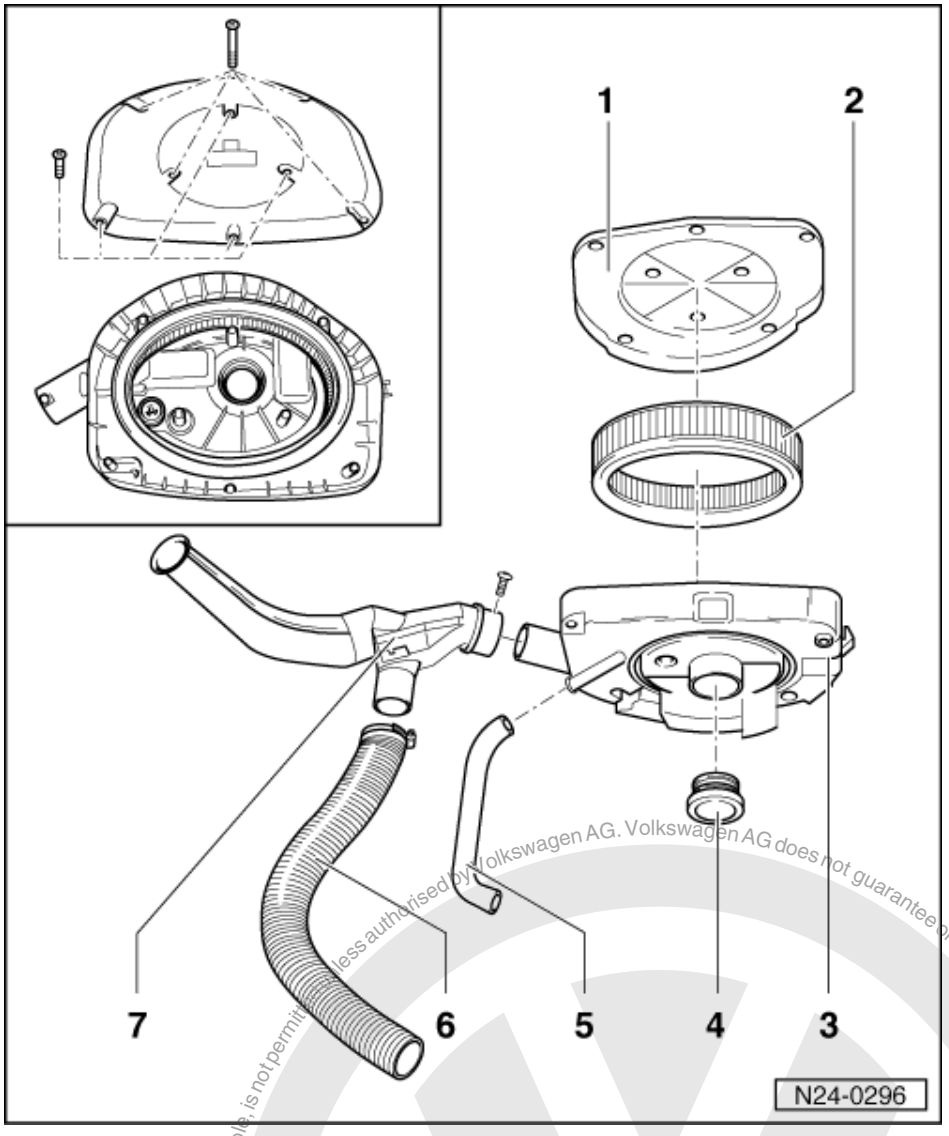

Removing air cleaner => Page 31 , Fig. 2

1 Air cleaner cover

Note:

If the cover screws are loosened or tightened with a power tool the lower part of the thread can be damaged. Therefore the use of a power tool is only permissible when:

- The power tool speed is max. 200 rpm
- The tightening torque is set to max. 3 Nm

2 Filter element
3 Air cleaner lower part

Protected by copyright. Copying for private or commercial purposes, in part or in whole, is not permitted unless authorised by Volkswagen AG. Volkswagen AG does not guarantee or accept any liability with respect to the correctness of information in this document. Copyright by Volkswagen AG.
satelettronica

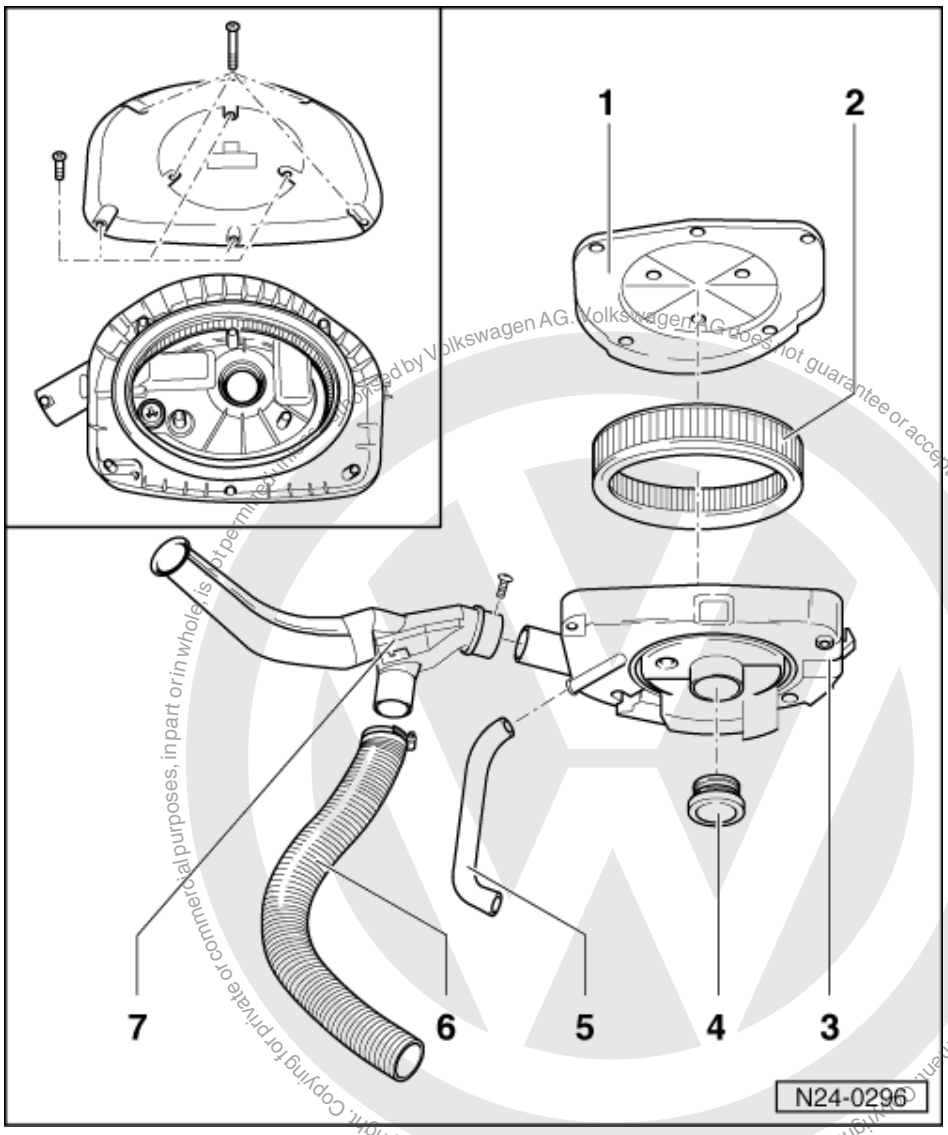

4 Gasket
- Renew if damaged

5 Crankcase breather hose

6 Warm air intake

7 Air intake housing with regulating flap
- Check intake air preheating => Page 61

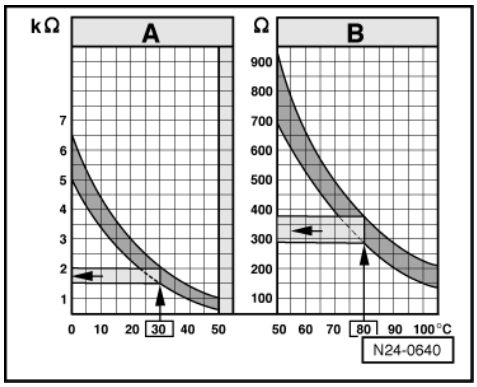

Protected by copyright. Copying for private or commercial purposes, in part or in whole, is not permitted unless authorised by Volkswagen AG. Volkswagen AG does not guarantee or accept any liability with respect to the correctness of information in this document. Copyright by Volkswagen AG.
satelettronica

-> Fig. 1 Resistance graph

The diagram is valid for coolant temperature sender (G62) and intake air sender (G42).

The diagram is divided into two temperature ranges:

A - From 0...50 °C
B - From 50...105 °C

Examples:

- 30 °C is in range A and corresponds to a resistance of 1.5...2.0 kω
- 80 °C is in range B and corresponds to a resistance of 275...375 ω

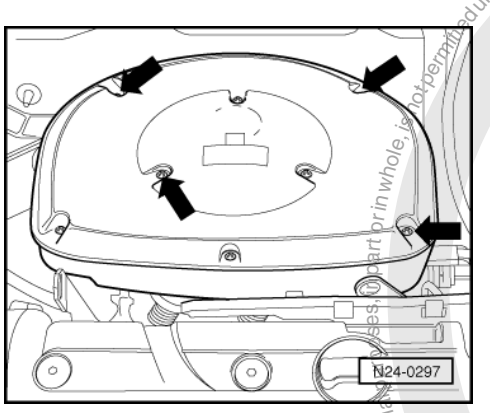

-> Fig. 2 Removing air cleaner

- Loosen air cleaner at securing screws marked by arrows.

Note:

If the securing screws are loosened or tightened with a power tool the thread in the intake pipe can be damaged. Therefore the use of a power tool is only permissible when:

- The power tool speed is max. 200 rpm
- The tightening torque is set to max. 3 Nm

1.8 - Safety precautions

Warning!
Fuel system is under pressure! Before opening the system place a cloth around the connection. Then release pressure by carefully loosening the connection.

To prevent injuries to persons and/or damage to the fuel injection and ignition system, the following must be noted:

- Do not touch or disconnect ignition wiring when the engine is running or being turned at starter speed.
- The ignition must be switched off before connecting or disconnecting injection or ignition system wiring or tester cables.
- If the engine is to be turned at starter speed, without starting, e.g. when checking compressions, pull plug off Hall sender (distributor).

Observe following if test and measuring instruments are required during a test drive:

- Test and measuring instruments must be secured to rear seat and operated by a 2nd person from this location.

Protected by copyright. Copying for private or commercial purposes, in part or in whole, is not permitted unless authorised by Volkswagen AG. Volkswagen AG does not guarantee or accept any liability with respect to the correctness of information in this document. Copyright by Volkswagen AG.
satelettronica

If test and measuring instruments are operated from front passenger's seat and the vehicle is involved in an accident, there is a possibility that the person sitting in this seat may receive serious injuries when the airbag is triggered.

1.9 - Rules for cleanliness

When working on the fuel supply/injection system, pay careful attention to the following "5 rules":

- Thoroughly clean all unions and the adjacent areas before disconnecting.
- Place parts that have been removed on a clean surface and cover. Do not use fluffy cloths!
- Carefully cover opened components or seal, if the repair cannot be carried out immediately.
- Only install clean components:
  Only unpack replacement parts immediately prior to installation.
  Do not use parts that have been stored loose (e.g. in tool boxes etc.).
- When the system is open:
  Do not work with compressed air if this can be avoided.
  Do not move vehicle unless absolutely necessary.

1.10 - Technical data

Idling speed	rpm	690...7901)2)
Engine control unit3)		
Control unit version		Motronic MP 9.0
Part No.		for latest version see parts catalogue
Governed speed	rpm	5600...6100

1) Up-to-date specifications:

=> Exhaust emissions test binder

2) The idling speed is increased by the control unit under the following conditions:

- When the battery voltage is too low: up to 870 rpm

- After longer full throttle drive and high temperatures: up to 870 rpm

- With air conditioning system switched on: up to approx. 900 rpm

3) If replaced carry out basic setting => Page 32

1.11 - Performing basic setting

Note:

The basic setting with the ignition switched on, matches the engine control unit to the throttle valve control part.

Special tools, testers, measuring instruments and auxiliary items required

- Fault reader V.A.G 1551 or vehicle system tester V.A.G 1552 with cable V.A.G 1551/3

Test conditions

- No faults must be stored in fault memory
  => Page 3 , interrogating fault memory

satelettronica

Test sequence

- Connect the fault reader V.A.G 1551 (V.A.G 1552). Then switch ignition on and select engine control unit with the "Address word" 01.
  (Connecting fault reader and selecting engine control unit => Page 2 .)

-> Indicated on display:

```
Rapid data transfer      HELP
Select function XX
```

- Press keys 0 and 4 for the function "Introduction of basic setting" and confirm entry with Q key.

-> Indicated on display:

```
Basic setting      HELP
Input display group number XXX
```

- Press keys 0, 9 and 8 for "Display group number 98" and confirm entry with Q key.

-> Indicated on display:

```
System in basic setting      98
     x.xxx V      x.xxx V      Idling ADP.
runs
```

After pressing the Q-key the throttle valve positioner is driven to Min., Max. and five intermediate positions and the relevant throttle valve angle stored in non-volatile memory. This procedure takes approx. 10 seconds. The throttle remains in the start position for a brief period then closes.

-> Indicated on display:

```
System in basic setting      98
     x.xxx V      x.xxx V      Idling ADP.
OK.
```

Note:

If the basic setting of the control unit is interrupted, the cause could be one of the following:

- Throttle valve cannot reach the mechanical stop because of contamination e.g. oil deposits or an incorrectly adjusted throttle cable.
- Battery voltage too low.
- Throttle valve control unit or wiring is defective. Checking => Page 38 .

After an interruption the fault "Basic setting not completed, fault in basic setting" is stored in fault memory. When next switching on ignition the basic setting is automatically performed again.

- End the engine basic setting by pressing the⇒ key.
- Press keys 0 and 6 for the function "End output" and confirm entry with the Q key.

1.12 - Checking Lambda probe and Lambda control

Special tools, testers, measuring instruments and auxiliary items required

- Fault reader V.A.G 1551 or vehicle system tester V.A.G 1552 with cable V.A.G 1551/3
- Test box V.A.G 1598/18
- Hand multimeter V.A.G 1526 or multimeter V.A.G 1715
- Adapter set V.A.G 1594
- Current flow diagram

Check conditions

- Basic setting OK.

Protected by copyright. Copying for private or commercial purposes, in part or in whole, is not permitted unless authorised by Volkswagen AG. Volkswagen AG does not guarantee or accept any liability with respect to the correctness of information in this document. Copyright by Volkswagen AG.
satelettronica

Protected by copyright. Copying for private or commercial purposes, in part or in whole, is not permitted unless authorised by Volkswagen AG. Volkswagen AG does not guarantee or accept any liability with respect to the correctness of information in this document. Copyright by Volkswagen AG.

- Exhaust system between cylinder head and catalyst free of leaks

Test sequence

- Connect fault reader V.A.G 1551 (V.A.G 1552). Start engine and select "Address word" 01 of engine control unit. When doing this the engine must be running at idling speed.
  (Connecting fault reader and selecting engine control unit => Page 2 .)

-> Indicated on display:

```
Rapid data transfer      HELP
Select function XX
```

- Press keys 0 and 8 for the function "Read measured value block" and confirm entry with Q key.

-> Indicated on display:

```
Read measured value block      HELP
Input display group number XXX
```

- Press keys 0, 0 and 1 for "Display group number 1" and confirm entry with Q key.

-> Indicated on display:
(1...4 = Display zones)

```
Read measured value block    1
     1     2     3     4
```

Only continue with the test when

- The coolant temperature is above 80 °C
  -Display zone 2-
- The engine has then run for a further 2 minutes at idling speed

- Note Lambda probe voltage in display zone 3. The voltage must
  fluctuate at least 10 times per minute
  in range of
  0... 1.0 V.

If the voltage change is slower, determine cause of fault. => Page 35 .

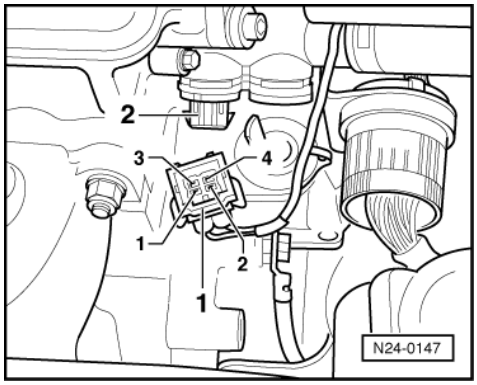

- -> Pull connector -1- off coolant temperature sender (G62) -2-. The probe voltage must
  increase
  and then decrease back to the old control range.
- Reconnect connector. The probe voltage must
  decrease
  and then increase to the old control range.

Note:

The throttle valve must not be operated during the check, otherwise the connector disconnected from the control unit will be recognised as a fault.

satelettronica

- Press ⇒key.
- Press keys 0 and 6 for the function "End output" and confirm entry with the Q key.

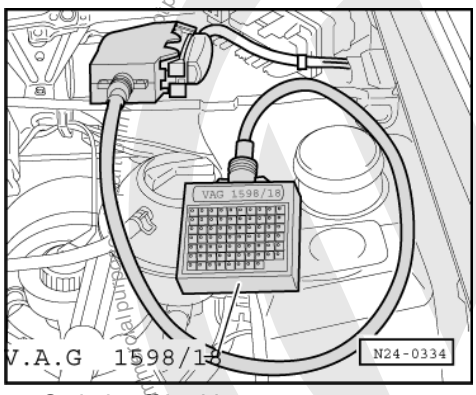

- Switch off ignition.

If no control is detected:

- Check Lambda probe heating => Page 35 .
- -> Connect test box V.A.G 1598/18 to control unit wiring loom.

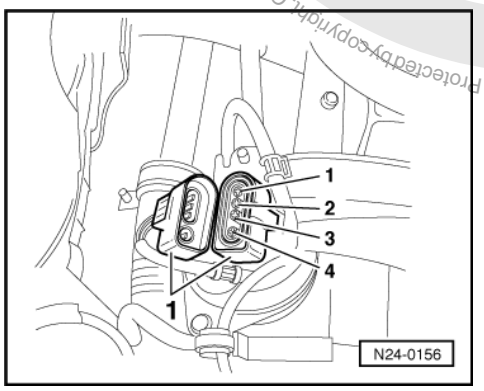

- -> Separate 4 pin connector to Lambda probe (G39) -1-.
- Check wiring between test box and connector for open circuit according to current flow diagram.
  Contact 3+socket 15
  Contact 4+socket 38
  Wire resistance: Max. 1.5 ω
- Check wiring at connector contacts 3+4 for short circuit to contacts 1+2 according to current flow diagram.
  Specification: ∞ω

If no wiring fault is detected:

- Renew Lambda probe
  => Page 23 , Item 23 .

Possible causes of fault if probe control frequency is too slow:

- The slots or holes in probe body are blocked
- The probe vent hole in area of connecting wire is blocked
- The probe has been overheated (glazed)
- The probe has been damaged by leaded fuel

1.13 - Checking Lambda probe heating

Special tools, testers, measuring instruments and auxiliary items required

- Test box V.A.G 1598/18
- Hand multimeter V.A.G 1526 or multimeter V.A.G 1715

Protected by copyright. Copying for private or commercial purposes, in part or in whole, is not permitted unless authorised by Volkswagen AG. Volkswagen AG does not guarantee or accept any liability with respect to the correctness of information in this document. Copyright by Volkswagen AG.
satelettronica

- Adapter set V.A.G 1594
- Current flow diagram

Test conditions

- Fuel pump relay must be OK
- Fuse 18 must be OK.

Checking voltage supply

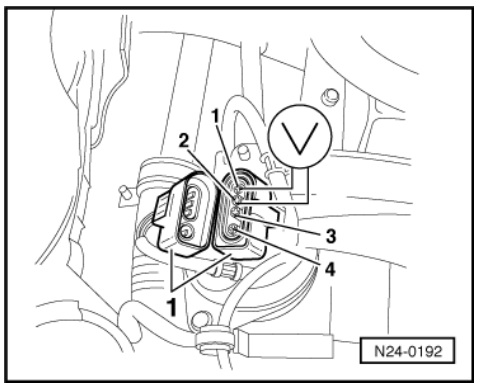

- -> Separate 4 pin connector to Lambda probe (G39) -1-.
- Connect multimeter using adapter cable from V.A.G 1594 to measure voltage on connector contacts 1+2.
- Start engine and measure voltage.
  Specification: at least 11 V
- Switch off ignition.

If no voltage is present:

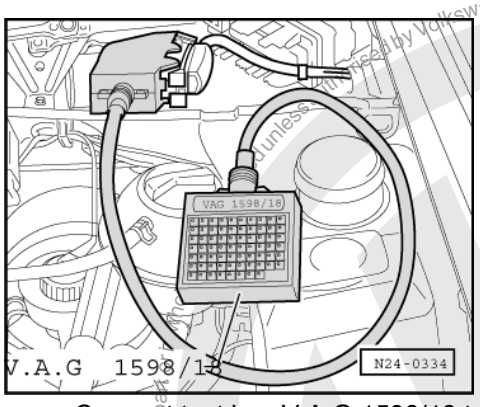

- -> Connect test box V.A.G 1598/18 to control unit wiring loom.
- Switch on ignition.
- Bridge test box sockets 1+25 with aux. cables from V.A.G 1594. The fuel pump must run.
- Observe display on multimeter.
  Specification: min. 11 V

If the specification is not obtained:

- Check wiring connections according to relay plate according to current flow diagram.

Protected by copyright. Copying for private or commercial purposes, in part or in whole, is not permitted unless authorised by Volkswagen AG. Volkswagen AG does not guarantee or accept any liability with respect to the correctness of information in this document. Copyright by Volkswagen AG.

satelettronica

1.14 - Checking engine operating mode

Note:

Check whether engine control unit recognises the engine operating modes (idling speed, part throttle, full throttle, overrun).

Special tools, testers, measuring instruments and auxiliary items required

- Fault reader V.A.G 1551 or vehicle system tester V.A.G 1552 with cable V.A.G 1551/3

Test conditions

- Coolant temperature at least 80 °C

Test sequence

- Connect fault reader V.A.G 1551 (V.A.G 1552). Start engine and select "Address word" 01 of engine control unit. When doing this the engine must be running at idling speed.
  (Connecting fault reader and selecting engine control unit => Page 2 .)

-> Indicated on display:

```
Rapid data transfer      HELP
Select function XX
```

- Press keys 0 and 8 for the function "Read measured value block" and confirm entry with Q key.

-> Indicated on display:

```
Read measured value block      HELP
Input display group number XXX
```

- Press keys 0, 0 and 4 for "Display group number 4" and confirm entry with Q key.

-> Indicated on display:
(1...4 = Display zones)

```
Read measured value block      4
     1     2     3     4
```

- Observe -8 digit number block- in display zone 4 :
  (The right-hand 4 digits are of no consequence)

Display in operating mode

- Idling:

  2nd position from left must display 1
  Display: 01000000

- Part throttle:

- Rev up evenly.

  3rd position from left must display 1
  Display:: 00100000

- Full throttle:

- Briefly open throttle fully (throttle burst).

  4th position from left must briefly display 1

Protected by copyright. Copying for private or commercial purposes, in part or in whole, is not permitted unless authorised by Volkswagen AG. Volkswagen AG does not guarantee or accept any liability with respect to the correctness of information in this document. Copyright by Volkswagen AG.
satelettronica

Display: 00010000

- Overrun mode:

- Increase engine speed to above 3000 rpm.
- Close throttle valve abruptly.

As long as the engine speed is above 1200 rpm 1st position from left must display 1
Display: 11000000 (briefly)

Note:

Below 1200 rpm idling speed is again recognised.

- Press ⇒key.
- Press keys 0 and 6 for the function "End output" and confirm entry with the Q key.

If the specifications are not attained:

- Interrogate fault memory, if necessary, repair fault and erase fault memory.
  => Page 3 , interrogating and erasing fault memory
- Check throttle valve potentiometer
  => Page 38 , Checking throttle valve control part.

1.15 - Checking throttle valve control part

Note:

If the throttle valve control part (J338) is removed and installed or replaced the basic setting must be performed => Page 32 .

Special tools, testers, measuring instruments and auxiliary items required

- Fault reader V.A.G 1551 or vehicle system tester V.A.G 1552 with cable V.A.G 1551/3
- Test box V.A.G 1598/18
- Hand multimeter V.A.G 1526 or multimeter V.A.G 1715
- Adapter set V.A.G 1594
- Current flow diagram

Checking idling switch

- Connect the fault reader V.A.G 1551 (V.A.G 1552). Then switch ignition on and select engine control unit with the "Address word" 01.
  (Connecting fault reader and selecting engine control unit => Page 2 .)

-> Indicated on display:

```
Rapid data transfer      HELP
Select function XX
```

- Press keys 0 and 8 for the function "Read measured value block" and confirm entry with Q key.

-> Indicated on display:

```
Read measured value block     HELP
Input display group number XXX
```

- Press keys 0, 0 and 1 for "Display group number 1" and confirm entry with Q key.

-> Indicated on display:
(1...4 = Display zones)

Protected by copyright. Copying for private or commercial purposes, in part or in whole, is not permitted unless authorised by Volkswagen AG. Volkswagen AG does not guarantee or accept any liability with respect to the correctness of information in this document. Copyright by Volkswagen AG.

satelettronica

```
Read measured value block 1
     1     2     3     4
```

- Observe 8 digit number block in display zone 4 :

  4th position from left with closed throttle valve must display 0
  Display: 00000000

- Slowly open throttle valve. After free travel, a stop is reached when opening throttle valve further the 4th position from left must jump to 1
  Display: 00010000

If the specifications are not obtained:

- Remove air cleaner => Page 31 , Fig. 2 .

Display	Cause	Continuation of check
Always 1	Open circuit or short to positive	=> Page 39
Always 0	Short to earth	=> Page 40

Continuation of check when display is always at 1

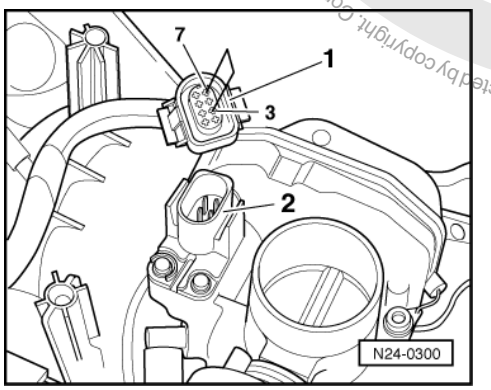

- -> Detach connector -1- from throttle valve control part -2-.
- Bridge connector contacts 3+7 with aux. cables from V.A.G 1594 and observe display.

Display 0:

- Press the ⇒key.
- Press keys 0 and 6 for the function "End output" and confirm entry with the Q key.
- Switch off ignition.
- Replace throttle valve control part
  =>Page 27 , item 4 .

Display 1:

- Press the ⇒key.
- Press keys 0 and 6 for the function "End output" and confirm entry with the Q key.
- Switch off ignition.
- Check voltage supply of throttle valve control part and wiring to control unit => Page 43 .

If the voltage supply and wiring is OK:

- Renew engine control unit
  => Page 25 , item 29

Volkswagen AG. Volkswagen AG does not guarantee or accept any liability with respect to the correctness of information in this document. Copyright by Volkswagen AG. Protected by copyright. Copying for private or commercial purposes, in part or in whole, is not permitted unless authorised by Volkswagen AG.
satelettronica

Continuation of check when display constantly shows 0

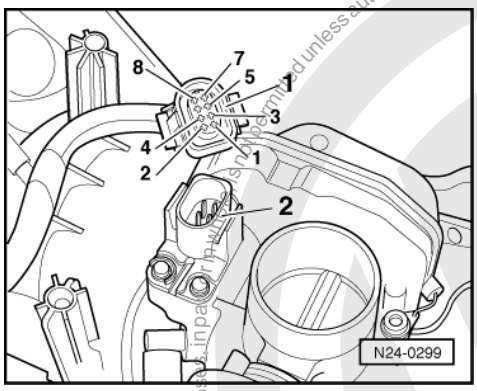

- -> Detach connector -1- from throttle valve control part -2-.

Display 1:

- Press the ⇒key.
- Press keys 0 and 6 for the function "End output" and confirm entry with the Q key.
- Switch off ignition.
- Replace throttle valve control part
  =>Page 27 , item 4 .

Display 0:

- Press the ⇒key.
- Press keys 0 and 6 for the function "End output" and confirm entry with the Q key.
- Switch off ignition.
- Check voltage supply of throttle valve control part and wiring to control unit => Page 43 .

If the voltage supply and wiring is OK:

- Renew engine control unit
  => Page 25 , item 29

Checking throttle valve positioner and throttle valve positioner potentiometer

Test conditions

- Coolant temperature at least 80 °C

Test sequence

- Connect fault reader V.A.G 1551 (V.A.G 1552). Start engine and select "Address word" 01 of engine control unit. When doing this the engine must be running at idling speed.
  (Connecting fault reader and selecting engine control unit => Page 2 .)

-> Indicated on display:

```
Rapid data transfer      HELP
Select function XX
```

- Press keys 0 and 8 for the function "Read measured value block" and confirm entry with Q key.

-> Indicated on display:

```
Read measured value block     HELP
Input display group number XXX
```

- Press keys 0, 0 and 3 for "Display group number 3" and confirm entry with Q key.

-> Indicated on display:

satelettronica

(1...4 = Display zones)

```
Read measured value block 3
     1      2      3      4
```

- Check voltage value for throttle valve positioner potentiometer throttle valve opening. The voltage must be approx. 4 V

If the specification is not obtained:

- Press the ⇒key.
- Press keys 0 and 6 for the function "End output" and confirm entry with the Q key.
- Switch off ignition.
- Remove air cleaner => Page 31 , Fig. 2 .

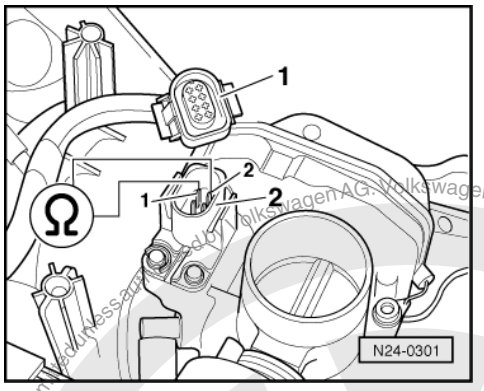

- -> Detach connector -1- from throttle valve control part -2-.
- Measure throttle valve positioner resistance between connector contacts 1+2.
  Specification: 3...200 ω
- Check voltage supply of throttle valve control part and wiring to control unit => Page 43 .

If no fault is detected:

- Replace throttle valve control part
  =>Page 27 , item 4 .

Checking throttle valve potentiometer

Test conditions

- Coolant temperature at least 80 °C

Test sequence

- Connect the fault reader V.A.G 1551 (V.A.G 1552). Then switch ignition on and select engine control unit with the "Address word" 01.
  (Connecting fault reader and selecting engine control unit => Page 2 .)

-> Indicated on display:

```
Rapid data transfer        HELP
Select function XX
```

- Press keys 0 and 8 for the function "Read measured value block" and confirm entry with Q key.

-> Indicated on display:

```
Read measured value block     HELP
Input display group number XXX
```

- Press keys 0, 0 and 3 for "Display group number 3" and confirm entry with Q key.

-> Indicated on display:

satelettronica

(1...4 = Display zones)

```
Read measured value block 3
     1      2      3      4
```

- Read off throttle valve angle in display zone 3.
- Slowly open throttle valve fully and observe angle display in display zone 3. The figure must increase uniformly over
  the complete range.
- Press the ⇒key.
- Press keys 0 and 6 for the function "End output" and confirm entry with the Q key.
- Switch off ignition.

If the figure does not increase uniformly:

- Replace throttle valve control part
  =>Page 27 , item 4 .

If the display constantly shows 0 <° or is above 90 <°:

- Remove air cleaner => Page 31 , Fig. 2 .

Display	Cause	Continuation of check
0 <°	Open circuit or short to positive	=> Page 42
above 90 <°	Short to earth	=> Page 43

Continuation of check when display 0 <°:

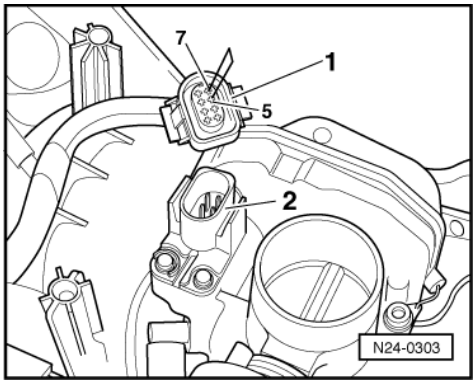

- -> Detach connector -1- from throttle valve control part -2-.
- Bridge connector contacts 5+7 with auxiliary cables from V.A.G 1594 and observe display.

Display above 90 <°:

- Press ⇒key.
- Press keys 0 and 6 for the function "End output" and confirm entry with the Q key.
- Switch off ignition.
- Replace throttle valve control part
  =>Page 27 , item 4 .

Display 0 <°:

- Press ⇒key.
- Press keys 0 and 6 for the function "End output" and confirm entry with the Q key.
- Switch off ignition.
- Check voltage supply of throttle valve control part and wiring to control unit => Page 43 .

If the voltage supply and wiring is OK:

Protected by copyright. Copying for private or commercial purposes, in part or in whole, is not permitted unless authorised by Volkswagen AG. Volkswagen AG does not guarantee or accept any liability with respect to the correctness of information in this document. Copyright by Volkswagen AG.
satelettronica

- Renew engine control unit
  => Page 25 , item 29

Continuation of check when display is above 90 <°:

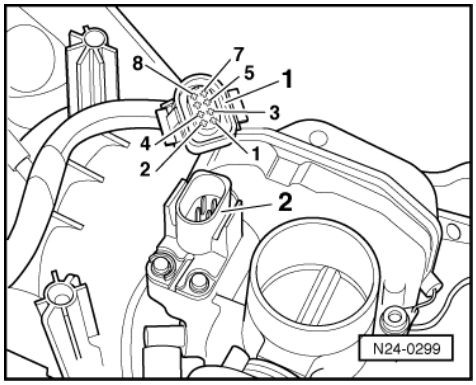

- -> Detach connector -1- from throttle valve control part -2-.

Display 0 <°:

- Press ⇒key.
- Press keys 0 and 6 for the function "End output" and confirm entry with the Q key.
- Switch off ignition.
- Replace throttle valve control part
  =>Page 27 , item 4 .

Display above 90 <°:

- Press ⇒key.
- Press keys 0 and 6 for the function "End output" and confirm entry with the Q key.
- Switch off ignition.
- Check voltage supply of throttle valve control part and wiring to control unit => Page 43 .

If the voltage supply and wiring is OK:

- Renew engine control unit
  => Page 25 , item 29

Checking voltage supply and wiring to control unit

- Remove air cleaner => Page 31 , Fig. 2 .

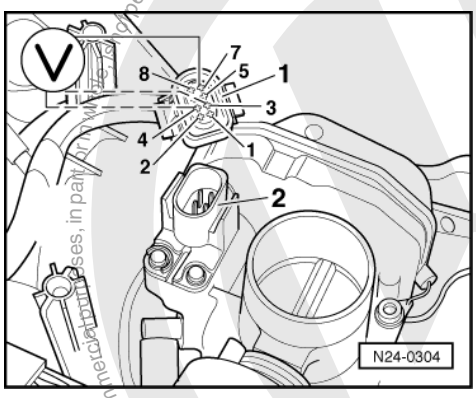

- -> Detach connector -1- from throttle valve control part -2-.
- Connect multimeter to measure voltage at connector contacts 4+7.
- Switch on ignition.
  Specification: min. 4.5 V
- Switch off ignition.
- Connect multimeter to measure voltage at connector contacts 3+7.
- Switch on ignition.

Protected by copyright. Copyright by Volkswagen AG.
Copyright by Volkswagen AG. Volkswagen AG does not guarantee or accept any liability with respect to the correctness of information in this document.
Copyright by Volkswagen AG. Reproduction, in part or whole, is permitted only with express authorisation by Volkswagen AG.
satelettronica

Specification: min. 9 V

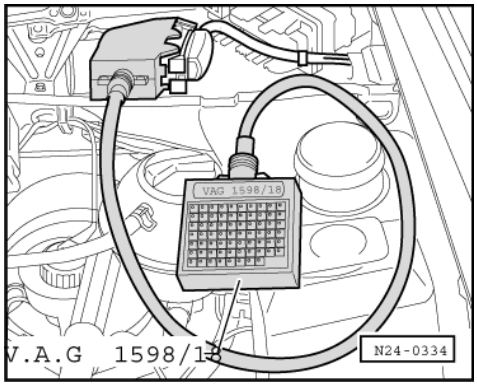

- Switch off ignition.
- -> Connect test box V.A.G 1598/18 to control unit wiring loom.

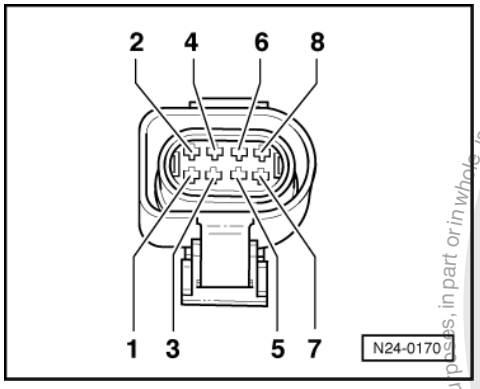

- -> Check wiring between test box and connector for open circuit according to current flow diagram.
  Contact 1+socket 2
  Contact 2+socket 26
  Contact 3+socket 10
  Contact 4+socket 14
  Contact 5+socket 41
  Contact 7+socket 17
  Contact 8+socket 16
  Wire resistance: Max. 1.5 ω
- Additionally check wires for short to one another.
  Specification: ∞ω

If no wiring fault is detected:

- Check voltage supply of engine control unit => Page 52 .

1.16 - Checking intake manifold pressure sender

Special tools, testers, measuring instruments and auxiliary items required

- Hand multimeter V.A.G 1526 or multimeter V.A.G 1715
- Test box V.A.G 1598/18
- Adapter set V.A.G 1594
- Current flow diagram

Test conditions

- Fault "00519 intake manifold pressure sender -G71" recognized by self-diagnosis

Protected by copyright. Copying for private or commercial purposes, in part or in whole, is not permitted unless authorised by Volkswagen AG. Volkswagen AG does not guarantee or accept any liability with respect to the correctness of information in this document. Copyright by Volkswagen AG.
satelettronica

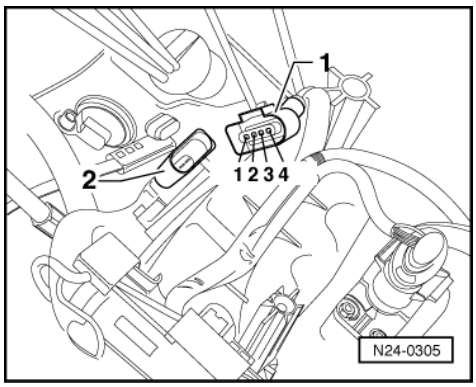

Note:

If sender or connecting wiring is defective then the control unit uses a substitute value.

Test sequence

- -> Pull off connector -1- from intake manifold pressure sender (G71) with intake air temperature sender (G42) -2- (engine stops).

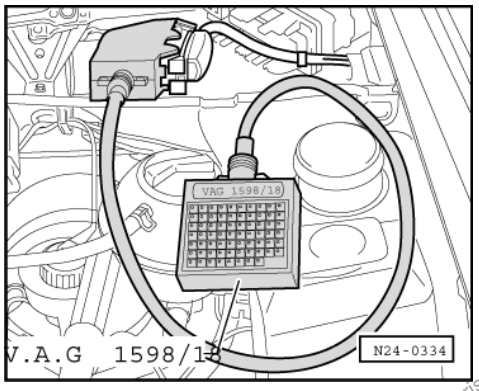

- -> Connect test box V.A.G 1598/18 to control unit wiring loom.
- Check wiring between test box and connector for open circuit according to current flow diagram.
  Contact 3+socket 37
  Contact 4+socket 18
  Wire resistance: Max. 1.5 ω
- Additionally check wires for short to one another, to vehicle earth and to battery positive.
  Specification: ∞ω

If no wiring fault is detected:

- Renew intake manifold pressure sender (G71) with intake air temperature sender (G42) => Page 27 , Item 1 .

1.17 - Testing speed signal

Special tools, testers, measuring instruments and auxiliary items required

- Fault reader V.A.G 1551 or vehicle system tester V.A.G 1552 with cable V.A.G 1551/3
- Hand multimeter V.A.G 1526 or multimeter V.A.G 1715
- Test box V.A.G 1598/18
- Adapter set V.A.G 1594
- Current flow diagram

Protected by copyright. Copying for private or commercial purposes, in part or on whole, is not permitted unless authorised by Volkswagen AG. Volkswagen AG does not guarantee or accept any liability with respect to the correctness of information in this document. Copyright by Volkswagen AG.
satelettronica

Protected by copyright. Copying for private or commercial purposes, in part or in whole, is not permitted unless authorised by Volkswagen AG. Volkswagen AG does not guarantee or accept any liability with respect to the correctness of information in this document. Copyright by Volkswagen AG.

Test conditions

- Speedometer OK, checking:

=> Repair group 90; Electrical system Electrical system

Test sequence

Note:

To check the speed signal the vehicle must be driven. To do this a second person is necessary.

Warning! Secure fault reader to rear seat and operate from this position.

- Connect fault reader V.A.G 1551 (V.A.G 1552). Start engine and select "Address word" 01 of engine control unit. When doing this the engine must be running at idling speed.
  (Connecting fault reader and selecting engine control unit => Page 2 .)

-> Indicated on display:

```
Rapid data transfer      HELP
Select function XX
```

- Press keys 0 and 8 for the function "Read measured value block" and confirm entry with Q key.

-> Indicated on display:

```
Read measured value block     HELP
Input display group number XXX
```

- Press keys 0, 0 and 4 for "Display group number 4" and confirm entry with Q key.

-> Indicated on display:
(1...4 = Display zones)

```
Read measured value block 4
     1     2     3     4
```

- Carry out test drive and when doing this use a second person to observe display.
  Specification: Display = approx. speedometer
- Press the ⇒key.
- Press keys 0 and 6 for the function "End output" and confirm entry with the Q key.

If the display does not change:

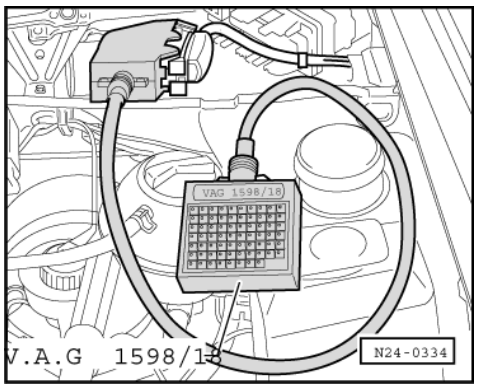

- Switch off ignition.
- -> Connect test box V.A.G 1598/18 to control unit wiring loom.
- Set multimeter scale to measure voltage and connect between test box sockets 1+36.
- Switch on ignition.
- Lift front left-hand wheel.
- Rotate front wheel and observe voltage display.

satelettronica

Specification: between 0 and at least 4 Volt fluctuating

If the display does not fluctuate:

- Check wiring to speedometer or to speedometer sender.

=> Current flow diagrams, Electrical fault finding and Fitting locations binder

1.18 - Checking coolant temperature sender

Special tools, testers, measuring instruments and auxiliary items required

- Fault reader V.A.G 1551 or vehicle system tester V.A.G 1552 with cable V.A.G 1551/3
- Test box V.A.G 1598/18
- Hand multimeter V.A.G 1526 or multimeter V.A.G 1715
- Adapter set V.A.G 1594
- Current flow diagram

Test conditions

- Fault "00522 coolant temperature sender G62" recognized by self-diagnosis

Note:

If sender or connecting wiring is defective the control unit operates with a substitute temperature. This substitute temperature is calculated according to operating conditions after starting engine.

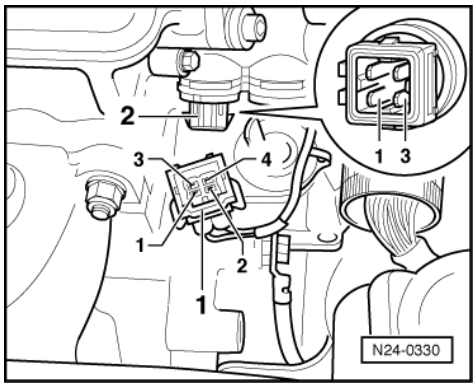

Test sequence

If the fault in the fault memory is stored as "Sporadic fault /SP":

- Additionally check the function of sender
  => Page 48 . To do this, the engine must be cold.

- -> Pull 4 pin connector -1- off coolant temperature sender (G62) -2-.
- Measure resistance between sender contacts 1+3.

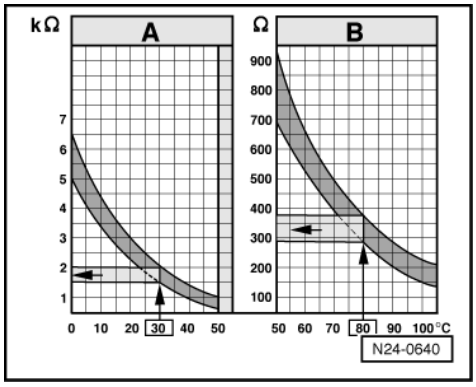

satelettronica

-> Specification see diagram

The diagram is divided into two temperature ranges:

A - From 0...50 °C
B - From 50...105 °C

Examples:

- 30 °C is in range A and corresponds to a resistance of 1.5...2.0 kω
- 80 °C is in range B and corresponds to a resistance of 275...375 ω

If the specification is not attained:

- Renew coolant temperature sender -2- => Page 23 , item 20 .

If specification attained:

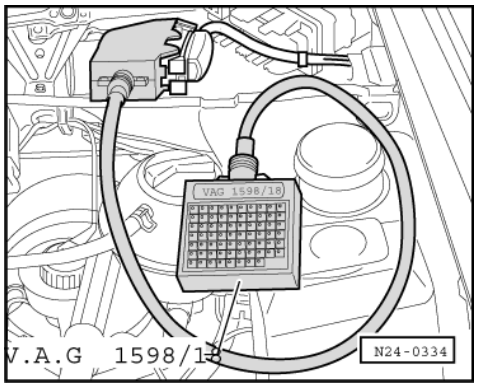

- -> Connect test box V.A.G 1598/18 to control unit wiring loom.
- Check wiring between test box and 4-pin connector for open circuit according to current flow diagram.
  Contact 1+ socket 17
  Contact 3+ socket 42
  Wire resistance: max. 1.5 ω
- Additionally check wires for short to one another, to vehicle earth and to battery positive.
  Specification: ∞ω

If no wiring fault is detected:

- Renew engine control unit
  => Page 25 , item 29

Additional check when fault is stored as "Sporadic fault /SP":

Test conditions

- Engine must be cold.

Functional check of sender

- Connect fault reader V.A.G 1551 (V.A.G 1552). Start engine and select "Address word" 01 of engine control unit. When doing this the engine must be running at idling speed.
  (Connecting fault reader and selecting engine control unit => Page 2 .)

-> Indicated on display:

```
Rapid data transfer      HELP
Select function XX
```

- Press keys 0 and 8 for the function "Read measured value block" and confirm entry with Q key.

-> Indicated on display:

Protected by copyright. Copyright by Volkswagen AG. Copyright by Volkswagen AG. Volkswagen AG does not guarantee or accept any liability with respect to the correctness of information in this document. Reproduction or commercial purposes in part or in whole, is not permitted unless authorised by Volkswagen AG.
satelettronica

```
Read measured value block     HELP
Input display group number XXX
```

- Press keys 0, 0 and 1 for "Display group number 1" and confirm entry with Q key.

-> Indicated on display:
(1...4 = Display zones)

```
Read measured value block     1
     1     2     3     4
```

- Observe coolant temperature value in display zone 2, whilst engine is running. The temperature figure must increase uniformly and without interruption.

Notes:

- If the display on fault reader jumps by 2...5 °C, it is a control unit fault and not caused by a defective sender.
- If irregular engine running occurs in certain temperature ranges and the temperature figure does not increase without interruption, the temperature signal is temporarily interrupted and the sender must be renewed.

- Press ⇒key.
- Press keys 0 and 6 for the function "End output" and confirm entry with the Q key.

1.19 - Checking intake air temperature sender

Special tools, testers, measuring instruments and auxiliary items required

- Fault reader V.A.G 1551 or vehicle system tester V.A.G 1552 with cable V.A.G 1551/3
- Test box V.A.G 1598/18
- Hand multimeter V.A.G 1526 or multimeter V.A.G 1715
- Adapter set V.A.G 1594
- Current flow diagram
- Chilling spray (commercially available)

Note:

If sender or connecting wiring is defective the control unit operates with a substitute temperature of 20 °C.

Test sequence

- Connect the fault reader V.A.G 1551 (V.A.G 1552). Then switch ignition on and select engine control unit with the "Address word" 01.
  (Connecting fault reader and selecting engine control unit => Page 2 .)

-> Indicated on display:

```
Rapid data transfer     HELP
Select function XX
```

- Press keys 0 and 8 for the function "Read measured value block" and confirm entry with Q key.

-> Indicated on display:

```
Read measured value block     HELP
Input display group number XXX
```

- Press keys 0, 0 and 2 for "Display group number 2" and confirm entry with Q key.

-> Indicated on display:
(1...4 = Display zones)

```
Read measured value block 2
     1     2     3     4
```

Protected by copyright. Copying for private or commercial purposes, in part or in whole, is not permitted unless authorised by Volkswagen AG. Volkswagen AG does not guarantee or accept any liability with respect to the correctness of information in this document. Copyright by Volkswagen AG.
satelettronica

- Read off intake air temperature value in display zone 4.

Display	Cause	Continuation of check
approx. -33 °C	Open circuit or short to positive	=> Page 50
approx. 118 °C	Short to earth	=> Page 51
Approx. ambient temperature1)	---	=> Page 51

1) If a temperature is displayed which is below the ambient air temperature of the sender, check sender wiring for transfer resistances. Note when doing this that sender is heated from external sources, e.g. radiated heat when engine is not running.

Continuation of check when display reads approx. -33 °C:

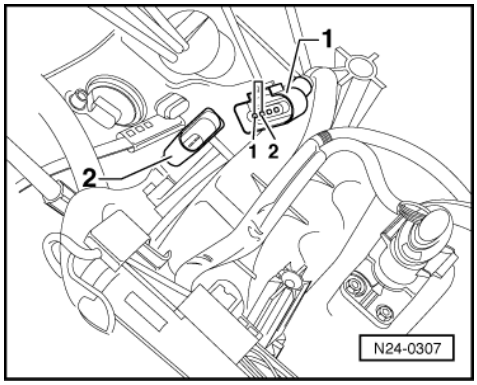

- -> Pull connector -1- off intake air temperature sender (G42) with intake manifold pressure sender (G71) -2-.
- Bridge connector contacts 1+2 using aux. cables from V.A.G 1594 and observe display.

Display approx. 118 ° C:

- Press ⇒key.
- Press keys 0 and 6 for the function "End output" and confirm entry with the Q key.
- Switch off ignition.
- Renew intake air temperature sender (G42) with intake manifold pressure sender -2- =>Page 27 , item 1 .

Display approx. -33 °C:

- Press ⇒key.
- Press keys 0 and 6 for the function "End output" and confirm entry with the Q key.
- Switch off ignition.

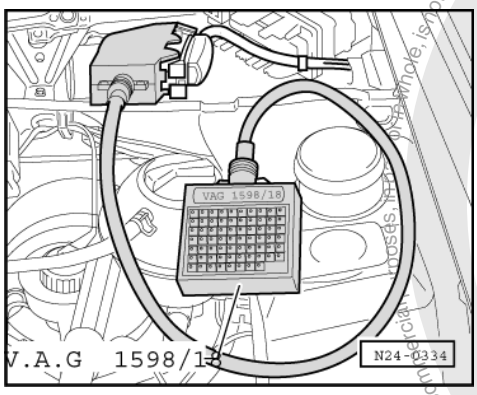

- -> Connect test box V.A.G 1598/18 to control unit wiring loom.
- Check wire between test box socket 43 and 4 pin connector contact 2 for open circuit according to current flow diagram.

satelettronica
Protected by copyright. Copying for private or commercial purposes, in whole or in part, is not permitted unless authorised by Volkswagen AG. Volkswagen AG does not guarantee or accept any liability with respect to the correctness of information in this document. Copyright by Volkswagen AG

Wire resistance: Max. 1.5 ω
- Check wiring additionally for short circuit to battery positive.
  Specification: ∞ω

- Check wire between test box socket 17 and 4 pin connector contact 1 for open circuit according to current flow diagram.
  Wire resistance: Max. 1.5 ω

If no fault in wire is detected:
- Renew engine control unit
  => Page 25 , item 29

Continuation of check when display reads approx. 118 °C:

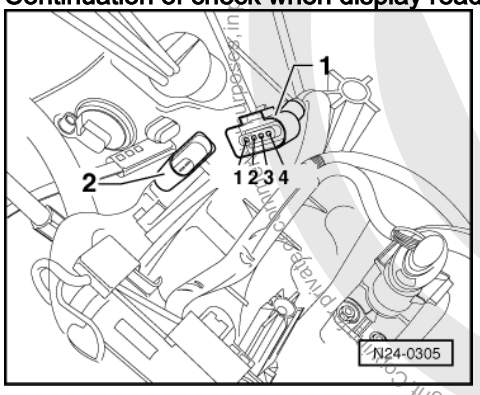

- -> Pull connector -1- off intake air temperature sender (G42) with intake manifold pressure sender (G71) -2-.

Display approx. -33 °C:
- Press ⇒key.
- Press keys 0 and 6 for the function "End output" and confirm entry with the Q key.
- Switch off ignition.
- Renew intake air temperature sender (G42) with intake manifold pressure sender -2-
  =>Page 27 , item 1 .

Display approx. 118 ° C:
- Press ⇒key.
- Press keys 0 and 6 for the function "End output" and confirm entry with the Q key.
- Switch off ignition.
- Pull connector off engine control unit.
- Check wiring to control unit connector at 4 pin connector contact 2 for short to wire contact 1 and to vehicle earth.
  Specification: ∞ω

If no wiring fault is detected:
- Renew engine control unit
  => Page 25 , item 29

Continuation of check when display = ambient temperature:

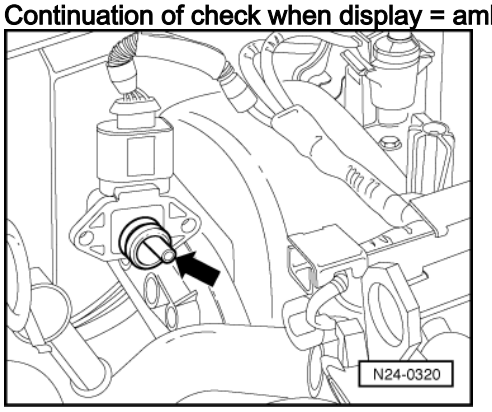

satelettronica

- -> Remove intake air temperature sender together with intake manifold pressure sender (connector remains connected).
- Note intake air temperature value in display zone 4.
- Spray sender with commercial chilling agent whilst observing the temperature value. The temperature value must
  decrease.
- Press ⇒key.
- Press keys 0 and 6 for the function "End output" and confirm entry with the Q key.

1.20 - Checking control unit voltage supply

Special tools, testers, measuring instruments and auxiliary items required

- Fault reader V.A.G 1551 or vehicle system tester V.A.G 1552 with cable V.A.G 1551/3
- Test box V.A.G 1598/18
- Hand multimeter V.A.G 1526 or multimeter V.A.G 1715
- Adapter set V.A.G 1594
- Current flow diagram

Check conditions

- Battery voltage at least 11 V.
- Alternator must be OK

Test sequence

- Connect fault reader V.A.G 1551 (V.A.G 1552). Start engine and select "Address word" 01 of engine control unit. When doing this the engine must be running at idling speed.
  (Connecting fault reader and selecting engine control unit => Page 2 .)

-> Indicated on display:

```
Rapid data transfer     HELP
Select function XX
```

- Press keys 0 and 8 for the function "Read measured value block" and confirm entry with Q key.

-> Indicated on display:

```
Read measured value block     HELP
Input display group number XXX
```

- Press keys 0, 0 and 2 for "Display group number 2" and confirm entry with Q key.

-> Indicated on display:
(1...4 = Display zones)

```
Read measured value block 2
     1     2     3     4
```

- Read off display values in display zone 3.
  Specification: constantly approx. battery voltage
- Press ⇒key.
- Press keys 0 and 6 for the function "End output" and confirm entry with the Q key.

If the displayed figure fluctuates or the battery voltage is not attained:

- Switch off ignition.

Volkswagen AG. Volkswagen AG does not guarantee or accept any liability with respect to the correctness of information in this document. Copyright by Volkswagen AG. Protected by copyright. Copying for private or commercial purposes, in part or in whole, is not permitted unless authorised by Volkswagen AG.
satelettronica

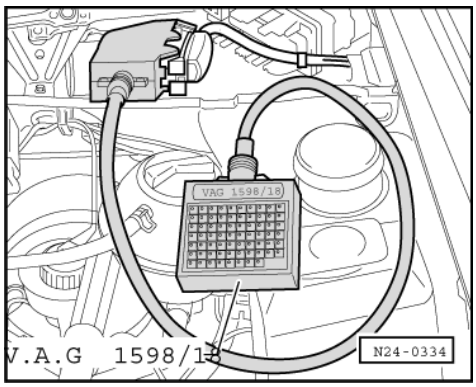

- -> Connect test box V.A.G 1598/18 to control unit wiring loom.
- Measure supply voltage between test box sockets 1+21 using multimeter and adapter cables from V.A.G 1594:
  Specification: at least 11 V
- Switch on ignition.
- Measure supply voltage between test box sockets 1+23 using multimeter and adapter cables from V.A.G 1594:
  Specification: at least 11 V

If the specifications are not attained:

- Check wiring connections according to relay plate according to current flow diagram.

1.21 - Matching engine control unit to electronic immobilizer

Special tools, testers, measuring instruments and auxiliary items required

◆ Fault reader V.A.G 1551 or vehicle system tester V.A.G 1552 with cable V.A.G 1551/3

Test conditions

• Authorized vehicle key required.

Work sequence

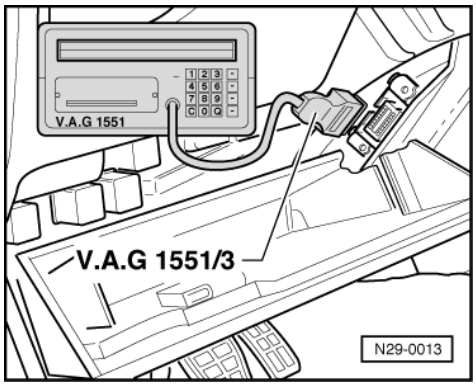

- -> Fold driver's side stowage compartment down.
- Connect fault reader V.A.G 1551 or vehicle system tester V.A.G 1552 with cable V.A.G 1551/3.
- Switch on ignition.
- Operate fault reader or vehicle system tester taking into account the information on the display:
- Press key 1 for "Rapid data transfer".
- Press keys 2 and 5 for address word "Immobilizer" and confirm entry with Q key.
- After the immobilizer control unit has registered, press ⇒ key.

-> Indicated on display:

Protected by copyright. Copying for private or commercial purposes, in part or in whole, is not permitted unless authorised by Volkswagen AG. Volkswagen AG does not guarantee or accept any liability with respect to the correctness of information in this document. Copyright by Volkswagen AG.
satelittunica

```
Rapid data transfer      HELP
Select function XX
```

- Press keys 1 and 0 for function "Adaption" and confirm entry with Q key.

-> Indicated on display:

```
Adaption
Feed in channel number XX
```

- Press key 0 twice for "Channel number 0" and confirm entry with Q key.

-> Indicated on display:

```
Adaptation      Q
Erase learned value?
```

- Confirm input with Q key.

-> Indicated on display:

```
Adaptation
Learned value has been erased
```

- Conclude adaption by pressing ⇒ key.
- Press keys 0 and 6 for the function "End output" and confirm entry with the Q key.
- Switch off ignition.

Note:

The identity of the engine control unit is read into the immobilizer control unit when next switching the ignition on.

1.22 - Checking air conditioner and air conditioner compressor signals

These signals from the air conditioner cause the initial control value for the idling stabilization to be increased when the air conditioner compressor switches in. Thereby the idling stabilization remains in the middle of the regulating range.

Special tools, testers, measuring instruments and auxiliary items required

- Fault reader V.A.G 1551 or vehicle system tester V.A.G 1552 with cable V.A.G 1551/3
- Test box V.A.G 1598/18
- Hand multimeter V.A.G 1526 or multimeter V.A.G 1715
- Adapter set V.A.G 1594
- Current flow diagram

Test conditions

- Air conditioner functioning OK.
- Air conditioner must be switched off
- No faults must be stored in fault memory
  => Page 3 , interrogating fault memory
- Vehicle at room temperature (warmer than + 15 °C).

Test sequence

- Connect fault reader V.A.G 1551 (V.A.G 1552). Start engine and select "Address word" 01 of engine control unit. When doing this the engine must be running at idling speed.
  (Connecting fault reader and selecting engine control unit => Page 2 .)

-> Indicated on display:

Copyright. Commercial purposes, in part or in whole, is not permitted unless authorised by Volkswagen AG. Volkswagen AG does not guarantee or accept any liability with respect to the correctness of information in this document. Copyright by Volkswagen AG.
satelettronica

```
Rapid data transfer      HELP
Select function XX
```

- Press keys 0 and 8 for the function "Read measured value block" and confirm entry with Q key.

-> Indicated on display:

```
Read measured value block     HELP
Input display group number XXX
```

- Press keys 0, 0 and 1 for "Display group number 1" and confirm entry with Q key.

-> Indicated on display:
(1...4 = Display zones)

```
Read measured value block     1
     1     2     3     4
```

- Observe 8 digit number block in display zone 4. 3rd position from left must display 0.
  Display: 00000000
- Switch on air conditioning system.

  3rd position from left must now display 1
  Display: 00100000

- Change to display group 4. To do this press:
  V.A.G 1551: key 3 three times
  V.A.G 1552: key ↑ three times

-> Indicated on display:
(1...4 = Display zones)

```
Read measured value block     4
     1     2     3     4
```

- Select lowest temperature and highest blower speed.
- Observe 8 digit number block in display zone 4. 2nd position from right must display 1.
  Display: 01000011

If the display does not change:

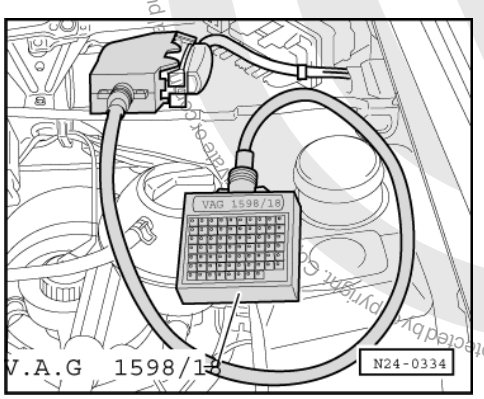

- -> Connect test box V.A.G 1598/18 to control unit wiring loom.
- Check wiring between test box sockets 33 and 35 and the air conditioner for open circuit according to current flow diagram.
  Wire resistance: Max. 1.5 ω

Protected by copyright. Copyright by Volkswagen AG. Volkswagen AG does not guarantee or accept any liability with respect to the correctness of information in this document. Copyright by Volkswagen AG. Unauthorised use or disclosure to third parties is not permitted. Reproduction, distribution and storage in whole or in part without the express consent of Volkswagen AG is prohibited.
satelettronica

1.23 - Checking injectors

Checking activation

Special tools, testers, measuring instruments and auxiliary items required

- Test box V.A.G 1598/18
- Hand multimeter V.A.G 1526 or multimeter V.A.G 1715
- Diode test lamp V.A.G 1527
- Adapter set V.A.G 1594
- Current flow diagram

Check conditions

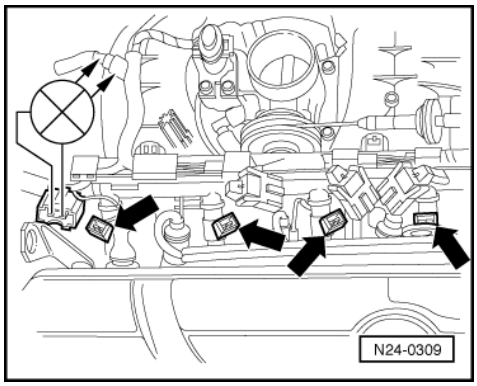

- Hall sender in distributor must be OK.
- Fuel pump relay must be OK

Test sequence

- Remove air cleaner => Page 31 , Fig. 2 .
- -> Pull connector off injectors -arrows-.
- Connect diode test lamp V.A.G 1527 using aux. cables from V.A.G 1594 to connector contacts of Cyl. 1.

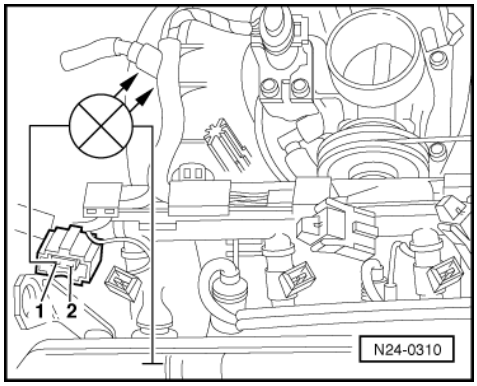

- Operate starter.
  The LED must flicker
- Repeat check at the injector connectors Cyl. 2...4.

The LED does not flicker on any cylinder:

- -> Connect diode test lamp to connector Cyl. 1, contact 1 and earth.
- Operate starter.
  The LED must light up

If the LED does not light up:

Protected by copyright. Copying for private or commercial purposes, in part or in whole, is not permitted unless authorised by Volkswagen AG. Volkswagen AG does not guarantee or accept any liability with respect to the correctness of information in this document. Copyright by Volkswagen AG.
satelettronica

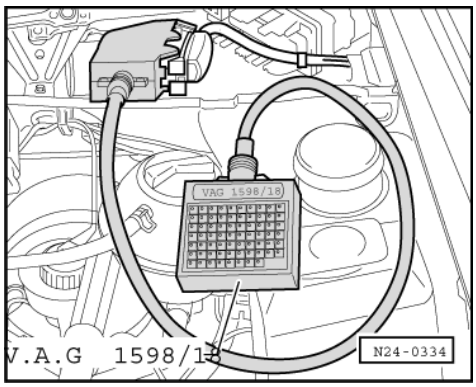

- Check wire between 2 pin connector contact 1 and fuel pump relay (J17) for open circuit according to current flow diagram.
  Wire resistance: max. 1.5 ω

The LED flickers on one or several cylinders:

- -> Connect test box V.A.G 1598/18 to control unit wiring loom.
- Check wiring between test box and connectors of injectors for open circuit according to current flow diagram.
  Cyl. 1 connector, contact 2+socket 7
  Cyl. 2 connector, contact 2+socket 6
  Cyl. 3 connector, contact 2+socket 28
  Cyl. 4 connector, contact 2+socket 4
  Wire resistance: Max. 1.5 ω
- Additionally check wires for short to one another.
  Specification: ∞ω
- Check wiring between connector contacts 1 of injectors for open circuit.
  Wire resistance: Max. 1.5 ω
- Additionally check wires for short to one another.
  Specification: ∞ω

Checking resistance of injectors with wiring

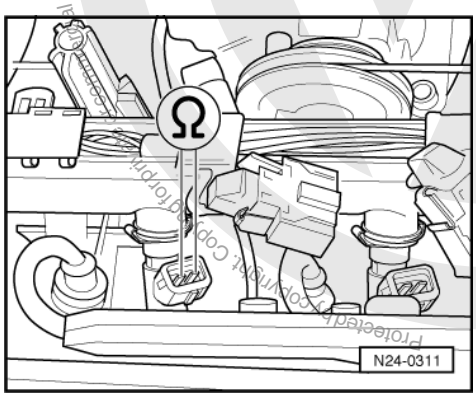

- -> Check of resistance injectors between contacts.
  Specification: 14...17 ω

Checking spray pattern and for leaks

Special tools, testers, measuring instruments and auxiliary items required

- Adapter set V.A.G 1594
- Digital potentiometer V.A.G 1630
- Measuring unit V.A.G 1602

Test sequence

- Pull 3 pin connector off ignition transformer.

Protected by copyright. Copying for private or commercial purposes, in part or in whole, is not permitted unless authorised by Volkswagen AG. Volkswagen AG does not guarantee or accept any liability with respect to the correctness of information in this document. Copyright by Volkswagen AG.
satelettronica

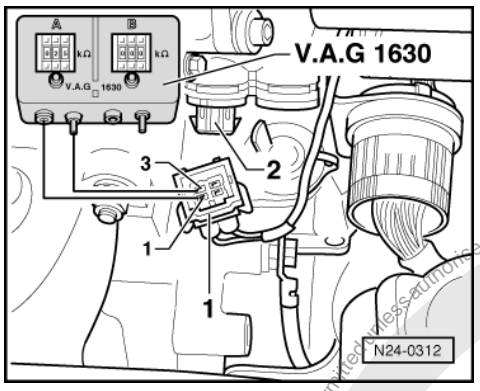

- -> Pull 4 pin connector -1- off coolant temperature sender (G62) -2-.
- Connect digital potentiometer V.A.G 1630 using aux. cables from V.A.G 1594 to connector contacts 1+3 and set connected side to 15 kω.
- Pull connector off throttle valve control part, oil pressure switch and intake manifold pressure sender, and unclip wiring at intake pipe and coolant regulator housing.

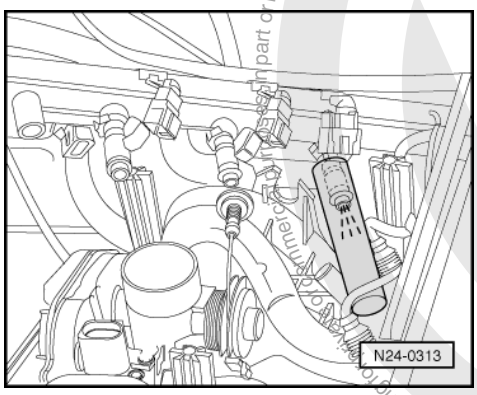

- Remove fuel manifold complete with all injectors from intake pipe (fuel hoses remain connected).
- -> Hold a small container under the injector to be checked and pull connectors off all other injectors.
- Operate starter, using a 2nd person. Injector must spray pulsatingly.
- Repeat check with other injectors ensuring that injector to be checked is only connected.
- Switch off ignition and afterwards check injectors for leaks. No more than
  2 drops/min
  may leak from each injector.

Note:

When installing the injectors ensure that the O rings

are not damaged.

1.24 - Checking fuel pressure regulator and holding pressure

The fuel pressure regulator controls the fuel pressure dependent upon intake manifold pressure.

Special tools, testers, measuring instruments and auxiliary items required

- Pressure tester V.A.G 1318
- Adapter 1318/10
- Adapter 1318/11
- Adapter 1318/16

Test conditions

- Fuel pump delivery rate OK, checking delivery rate:

satelettronica

=> Repair group 20; Removing and installing parts of the fuel supply system; Checking fuel pump Removing and installing parts of the fuel supply system Checking fuel pump

Test sequence

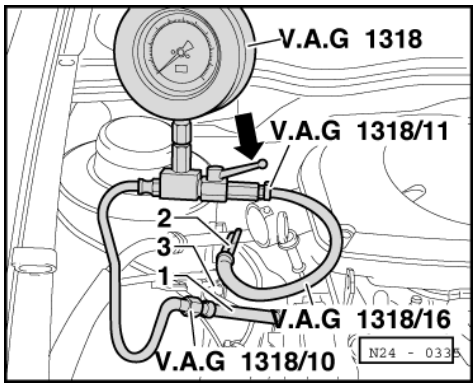

Warning!
Fuel system is under pressure! Before opening the system place a cloth around the connection. Then release pressure by carefully loosening the connection.

- -> Pull the fuel supply hose (white marking) -1- off fuel supple pipe -2-.
- Connect pressure measured device V.A.G 1318 using adapter 1318/10 to hose and using adapters /11 and / 16 to fuel supply pipe.
- Open measured device cut-off tap. (The handle points in throughflow direction -arrow-).
- Start the engine and run at idling speed.

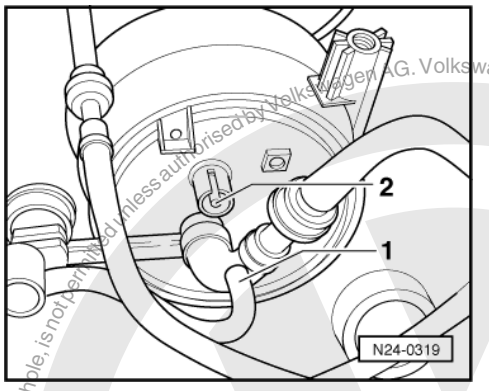

- Measure fuel pressure.
  Specification: Approx. 2.5 bar
- -> Pull vacuum hose off fuel pressure regulator -1- at intake pipe -2-. The fuel pressure must increase
  to approx. 3.0 bar.
- Switch off ignition.
- Check for leaks and holding pressure by watching pressure drop on gauge. After 10 minutes there must be a residual pressure of
  at least 2 bar.

If the holding pressure drops below 2 bar:

Protected by copyright. Copying for private or commercial purposes, in part or in whole, is not permitted unless authorised by Volkswagen AG. Volkswagen AG does not guarantee or accept any liability with respect to the correctness of information in this document. Copyright by Volkswagen AG.
satelettronica

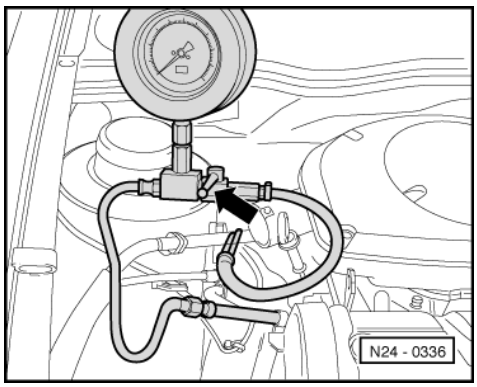

- Start the engine and run at idling speed.
- -> Switch ignition off after the pressure has built-up. At the same time close pressure measured device cut-off tap (handle cross throughflow direction -arrow-).
- Observe pressure drop on gauge.

If the pressure does not drop:

- Check fuel pump non-return valve.

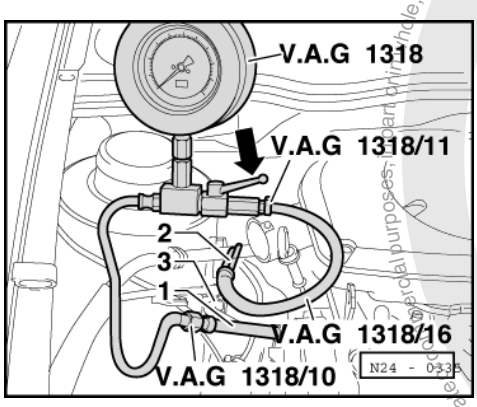

=> Repair group 20; Removing and installing parts of the fuel supply system; Checking fuel pump non-return valve. Removing and installing parts of the fuel supply system Checking fuel pump non-return valve.

If the pressure drops again:

- -> Open pressure tester V.A.G 1318 shut-off tap (handle in throughflow direction -arrow-).
- Start the engine and run at idling speed.

- Switch ignition off after the pressure has build-up. At the same time pinch/seal the return hose (with blue marking) -3- together.

If the pressure does not drop:

- Renew fuel pressure regulator
  =>Page 26 , item 4 .

If the pressure drops again:

- Check pipe connections, O-rings on fuel manifold and injectors for leaks.
- Check pressure gauge for leaks.

Note:

Before removing pressure gauge place a cloth around the connections to be loosened.

satelettronica

1.25 - Checking intake air system for leaks (unmetered air)

Special tools, testers, measuring instruments and auxiliary items required

- Fault reader V.A.G 1551 or vehicle system tester V.A.G 1552 with cable V.A.G 1551/3
- Engine leak detector spray G 001 800 A1

Test sequence

Notes:

- The vacuum in the intake system will cause the leak detector spray to be drawn in with the unmetered air. The leak detector spray reduces the ignitability of the mixture. This leads to a drop in engine speed and to a change of Lambda probe reading.
- The safety precautions listed on the container must be adhered to.

- Connect fault reader V.A.G 1551 (V.A.G 1552). Start engine and select "Address word" 01 of engine control unit. When doing this the engine must be running at idling speed.
  (Connecting fault reader and selecting engine control unit => Page 2 .)

-> Indicated on display:

```
Rapid data transfer      HELP
Select function XX
```

- Press keys 0 and 8 for the function "Read measured value block" and confirm entry with Q key.

-> Indicated on display:

```
Read measured value block      HELP
Input display group number XXX
```

- Press keys 0, 0 and 1 for "Display group number 1" and confirm entry with Q key.

-> Indicated on display:
(1...4 = Display zones)

```
Read measured value block      1
     1      2      3      4
```

- Note engine speed in display zone 1.
- Note Lambda probe voltage in display zone 3 and the area it fluctuates in.
- Systematically spray parts of the intake system with engine leak detector spray.

Engine speed or Lambda probe voltage does not change:

- Press the ⇒key.
- Press keys 0 and 6 for the function "End output" and confirm entry with the Q key.

If the engine speed drops or the Lambda probe voltage changes:

- Press the ⇒key.
- Press keys 0 and 6 for the function "End output" and confirm entry with the Q key.
- Check sprayed areas of intake system for leaks and rectify if necessary.

1.26 - Checking intake air preheating

Checking regulating flap

- Remove air cleaner intake support.

Volkswagen AG. Volkswagen AG does not guarantee or accept any liability with respect to the correctness of information in this document. Copyright by Volkswagen AG. Protected by copyright. Copying for private or commercial purposes, in part or in whole, is not permitted unless authorised by Volkswagen AG.
satelettronica

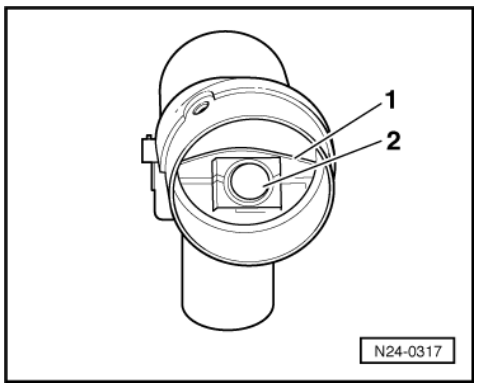

- -> Check control flap position -1-.
  - Above +23 °C flap must close warm air connection
  - Below +10 °C flap opens warm air connection

Note:

The function of the thermo element -2- can be checked easily by spraying with a commercial chilling agent.

Protected by copyright. Copying for private or commercial purposes, in part or in whole, is not permitted unless authorised by Volkswagen AG. Volkswagen AG does not guarantee or accept any liability with respect to the correctness of information in this document. Copyright by Volkswagen AG.
satelettronica

1.27 - Wire routing engine wiring loom

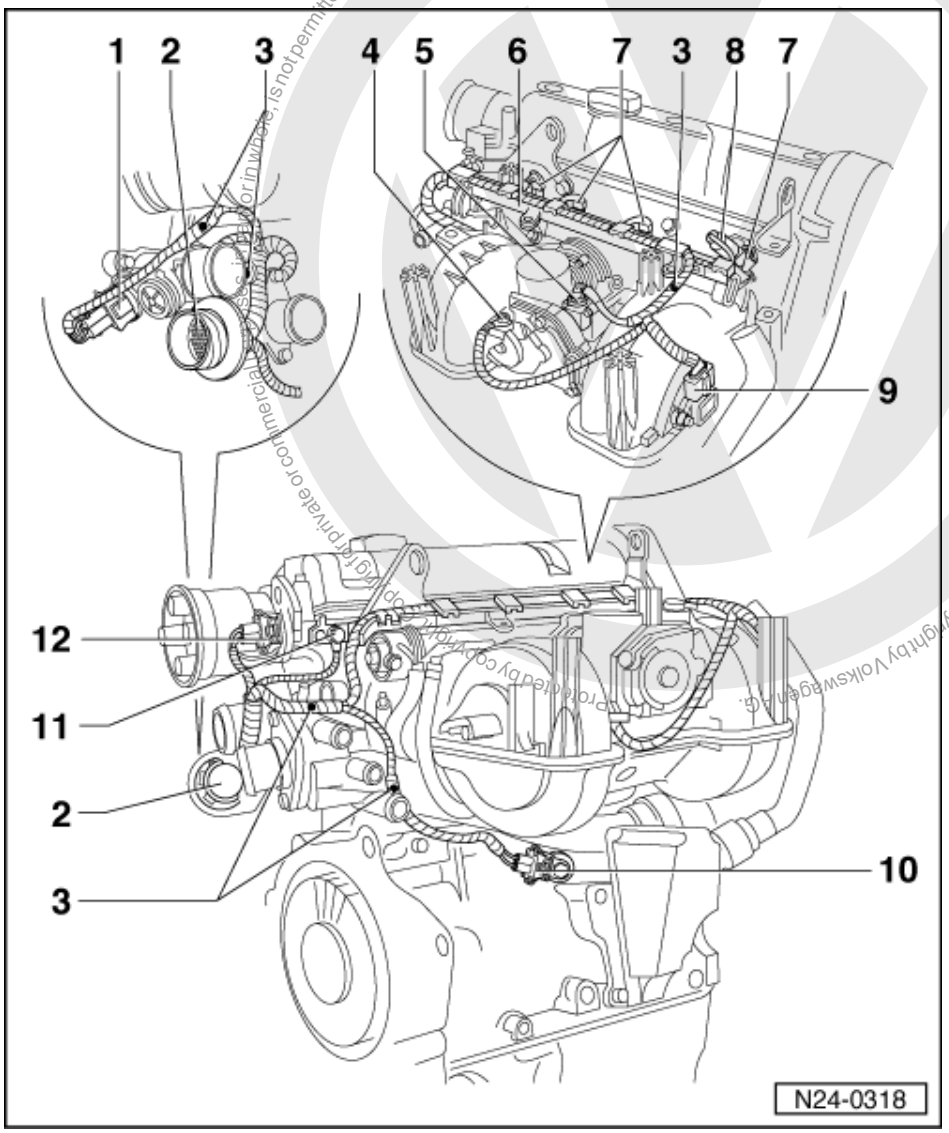

1 Coolant temperature sender (G62)
2 Central connector
3 Push-in clip
- Attached to wiring loom

4 Earth connection
- For throttle valve control part

5 Throttle valve control part (J338)
6 Cable guide
7 Injectors (N30...N33)
8 Oil pressure switch (F22)

Copyright by Volkswagen AG. Volkswagen AG does not guarantee or accept any liability with respect to the correctness of information in this document. Copyright by Volkswagen AG. Protected by copyright. Copying for private or commercial purposes, in whole or in part, is not permitted unless authorised by Volkswagen AG.
satelettronica

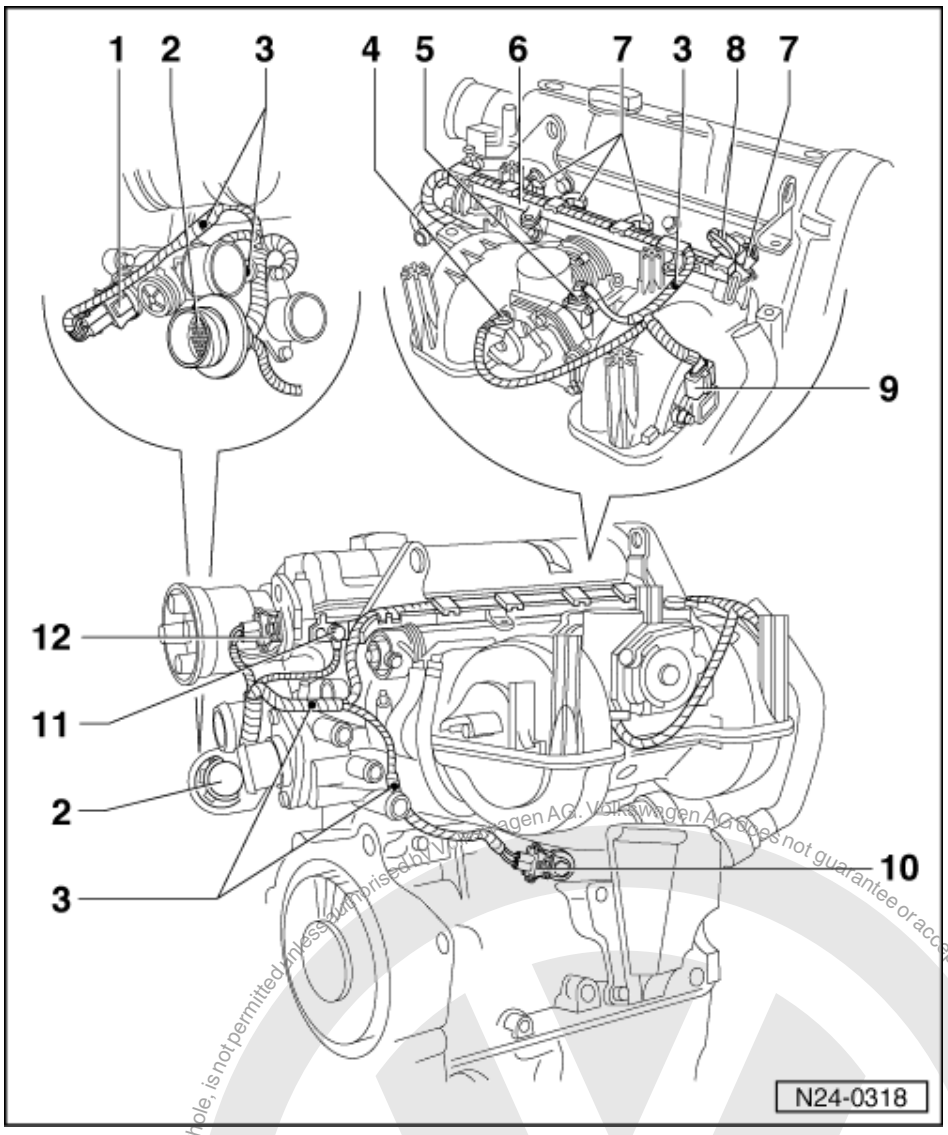

9 Intake manifold pressure sender (G71) with intake air temperature sender (G42)
10 Knock sensor 1 (G61)
1 Earth connection
- Engine earth

2 Hall sender (G40)

Protected by copyright. Copying for private or commercial purposes, in part or in whole, is not permitted unless authorised by Volkswagen AG. Volkswagen AG does not guarantee or accept any liability with respect to the correctness of information in this document. Copyright by Volkswagen AG.
satelettronica

28 - Ignition system

Protected by copyright. Copying for private or commercial purposes, in part or in whole, is not permitted unless authorised by Volkswagen AG. Volkswagen AG does not guarantee or accept any liability with respect to the correctness of information in this document. Copyright by Volkswagen AG.

1 - Servicing ignition system

1.1 - Servicing ignition system

1.2 - General notes on ignition system

- Only the components which specifically relate to the ignition system are dealt with here. For the other components of the injection and ignition system => Repair group 24.
- Disconnecting and connecting the battery must only be done with the ignition switched off, otherwise the engine control unit could be damaged.
- The engine control unit is equipped with self diagnosis.
- Components marked with * are checked via the self diagnosis
  => Page 3 , interrogating and erasing fault memory.
- For trouble-free operation of the electrical components a voltage of at least 11.5 V is necessary.
- During some checks it is possible that the control unit will recognise and store a fault. Therefore after completing all checks and repairs the fault memory must be interrogated and if necessary erased.
  => Page 3 , interrogating and erasing fault memory

Safety precautions => Page 70

Test data, spark plugs => Page 70

satelettronica

1.3 - Removing and installing parts of the ignition system

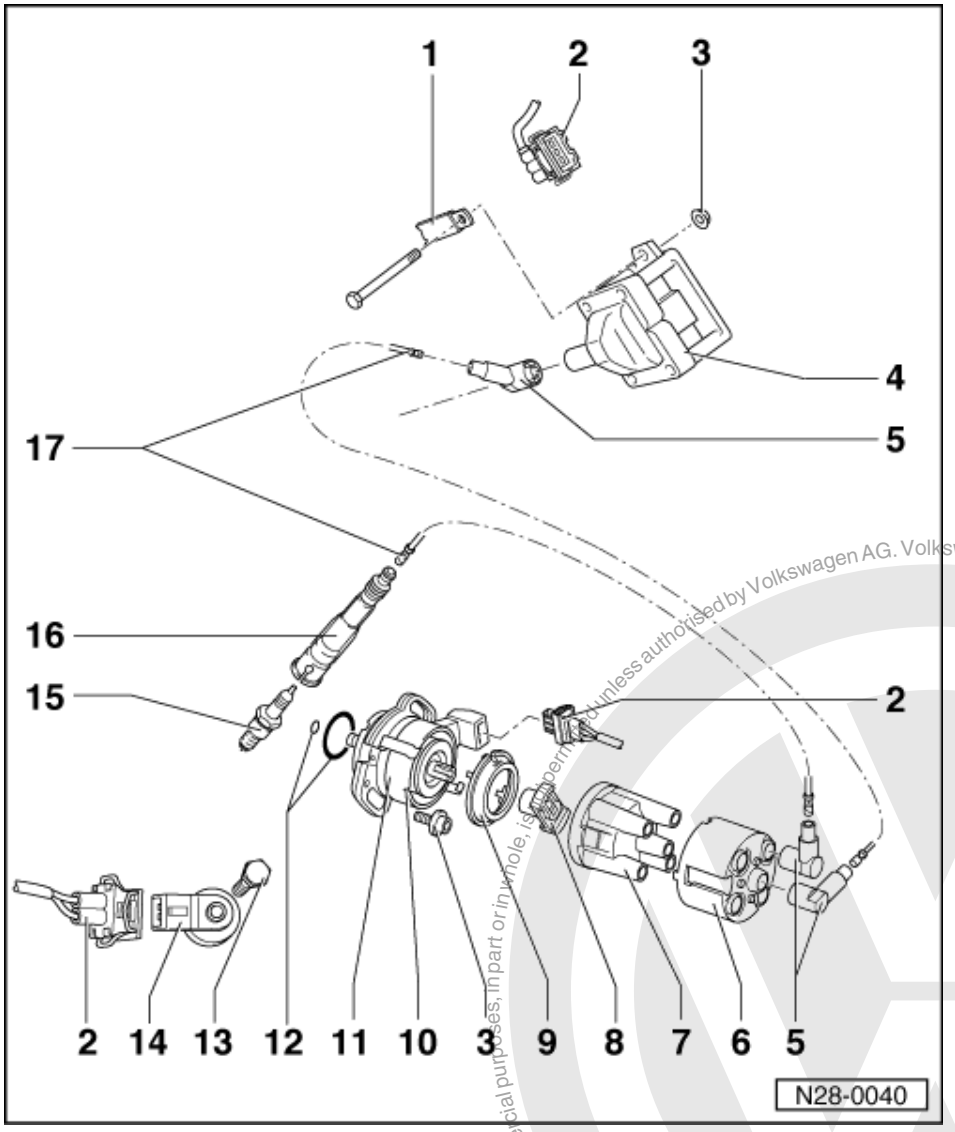

1 Earth strap
2 Connector
3 10 Nm
4 Ignition transformer (N152)
- With output stage (N157)
- Checking => Page 73

5 Suppressor
- 0.6...1.4 kω

6 Screening cap
7 Distributor cap
- Check for cracks and signs of tracking
- Check contact wear
- Clean before fitting
- Check carbon brush for wear and freedom of movement

Protected by copyright. Copying for private or commercial purposes, in part or in whole, is not permitted unless authorised by Volkswagen AG. Volkswagen AG does not guarantee or accept any liability with respect to the correctness of information in this document. Copyright by Volkswagen AG.
satelettronica

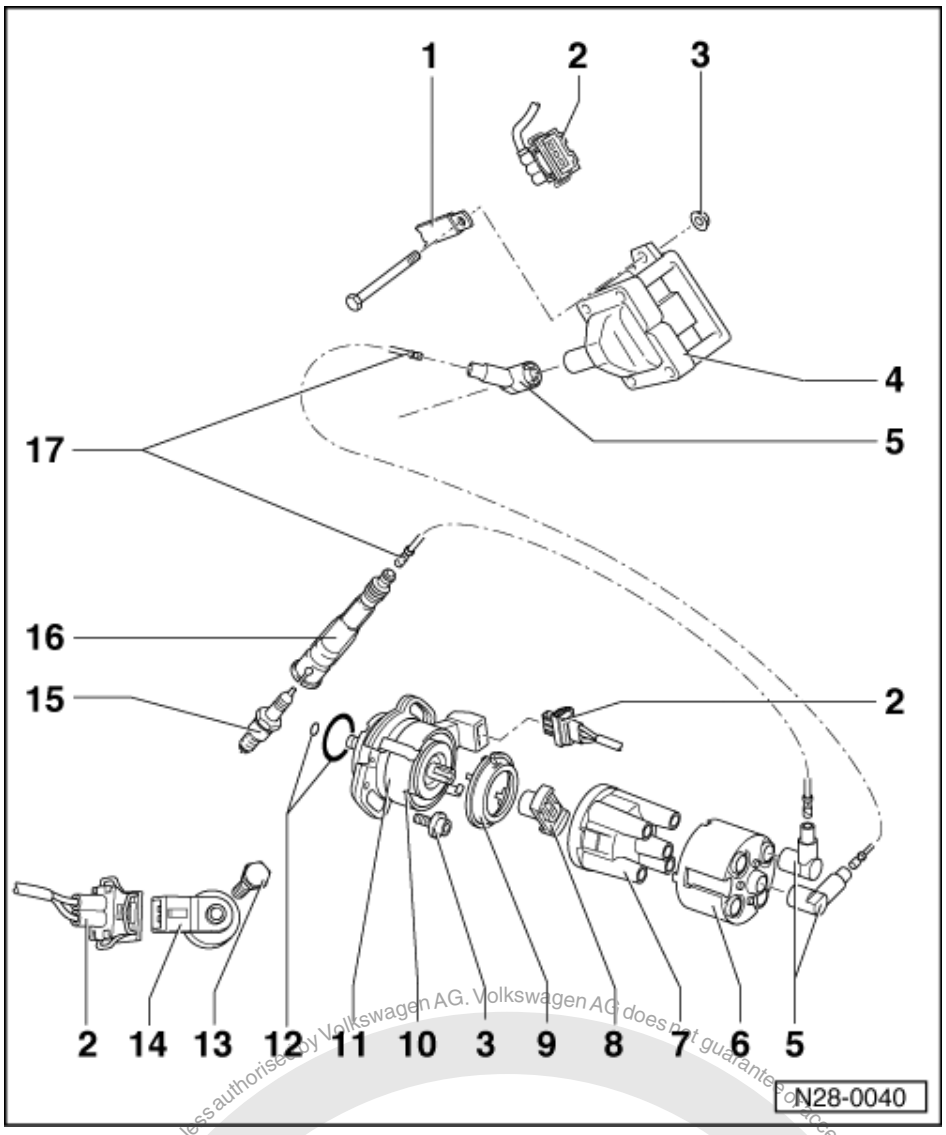

8 Rotor arm
- Marking: R1
- 0.6...1.4 kω

9 Dust cap

10 No. 1 Cyl. marking

11 Distributor with Hall sender (G40)
- Dismantling and assembling => Page 69
- Checking and adjusting ignition timing => Page 70
- Checking Hall sender => Page 72

12 O ring
- Renew if damaged

13 20 Nm
- Tightening torque influences the function of the knock sensor

Protected by copyright. Copying for private or commercial purposes, in part or in whole, is not permitted unless authorised by Volkswagen AG. Volkswagen AG does not guarantee or accept any liability with respect to the correctness of information in this document. Copyright by Volkswagen AG.
satelettronica

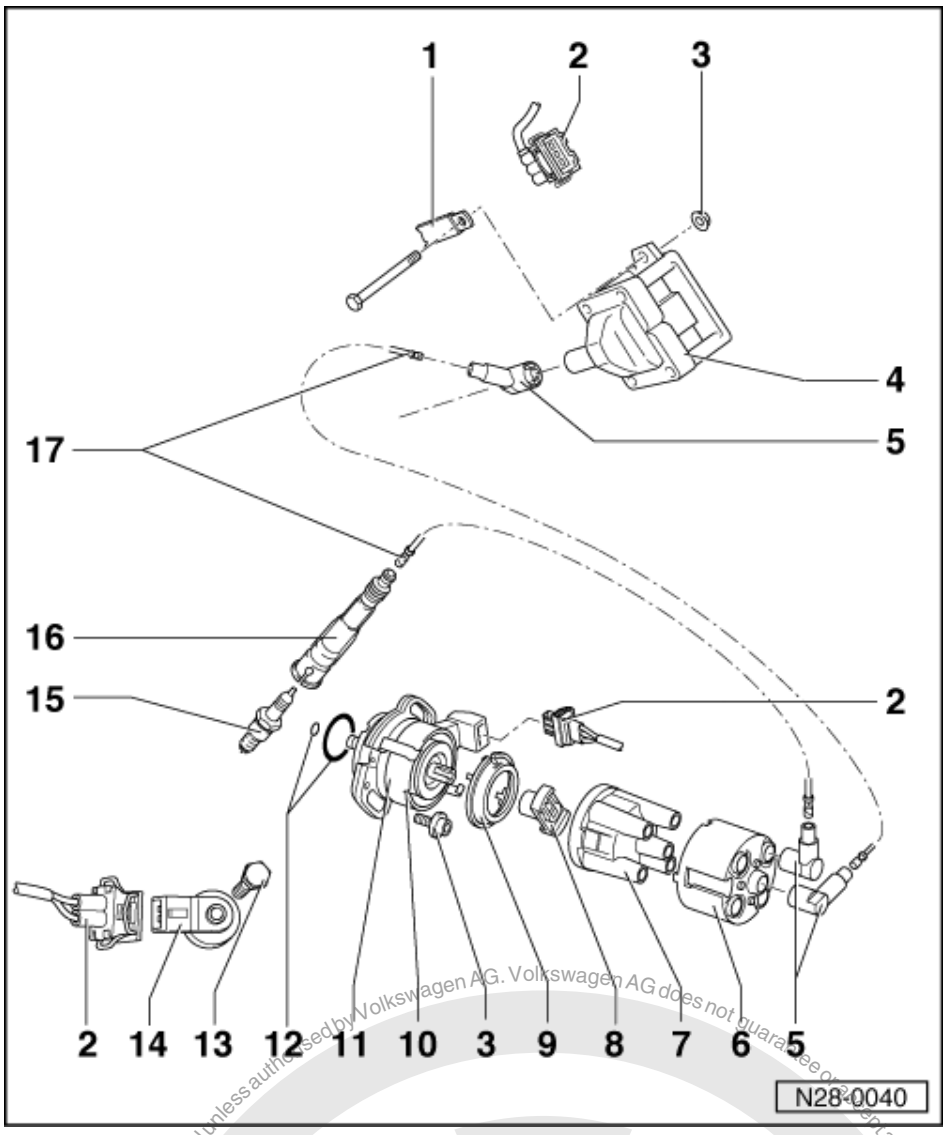

14 Knock sensor 1 (G61)*

- Sensor and connector contacts are gold-plated

15 Spark plug, 25 Nm

- Type and electrode gap
  => Page 70

16 Spark plug connector

- 4...6 kω

17 H.T. cable

- Check for continuity

Protected by copyright. Copying for private or commercial purposes, part or in the whole is not permitted unless authorised by Volkswagen AG. Volkswagen AG does not guarantee or assume any liability with respect to the correctness of information in this document. Copyright by Volkswagen AG.

satelettronica

1.4 - Dismantling and assembling distributor

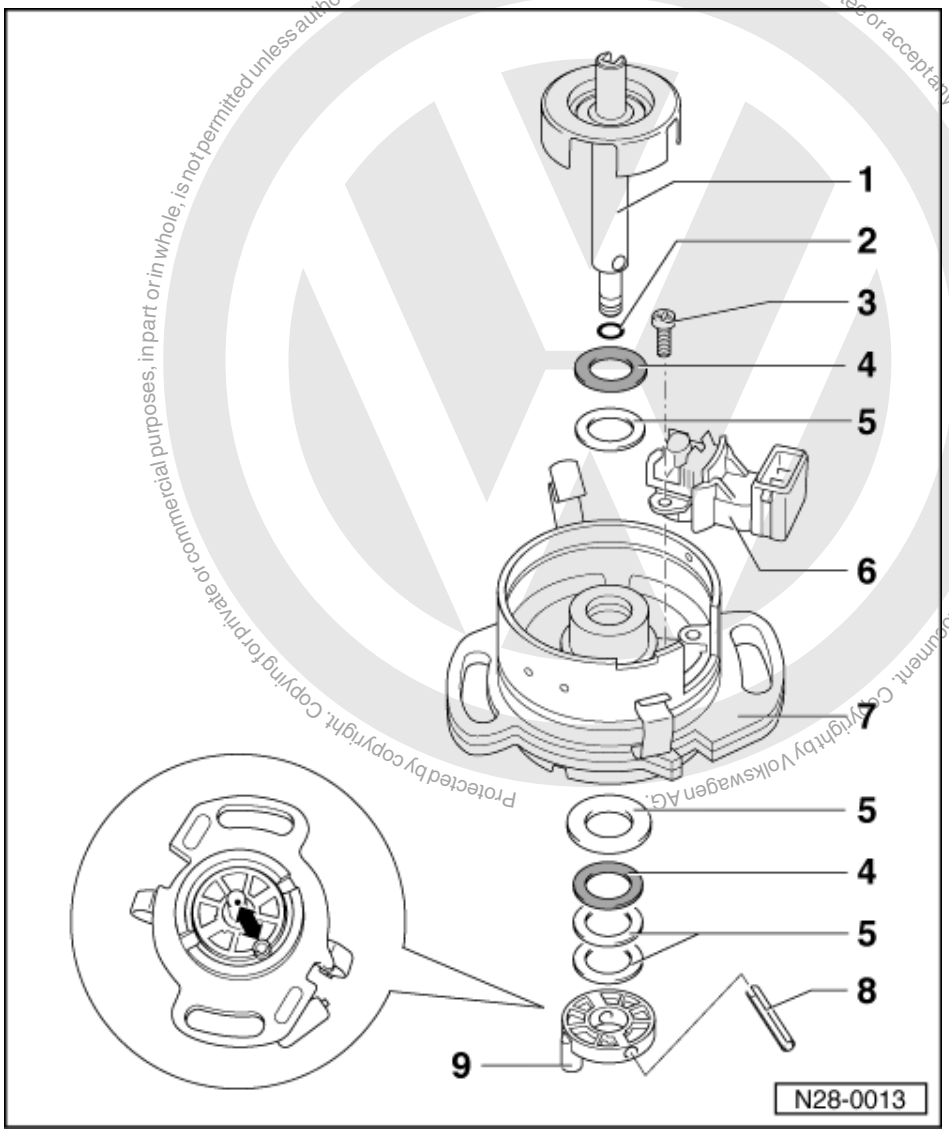

1 Distributor shaft
- With Hall sender rotor
- Pull out after removing the spring pin -7-

2 O ring
- Renew if damaged

3 3 Nm

4 Plastic washer

5 Shim(s)

6 Hall sender (G40)
- Checking => Page 72

7 Distributor body

8 Spring pin

9 Coupling
- Before removing mark position of drive tongue to shaft - 1 -

Protected by copyright. Copying for private or commercial purposes, in part or in whole, is not permitted unless authorised by Volkswagen AG. Volkswagen AG does not guarantee or accept any liability with respect to the correctness of information in this document. Copyright by Volkswagen AG.
satelettronica

1.5 - Safety precautions

To prevent injuries to persons and/or damage to the injection and ignition system, the following must be observed:

- Do not touch or pull off ignition wiring when engine is running or turning at starter speed.
- The ignition must be switched off when disconnecting or connecting injection and ignition system wiring as well as test instrument cables.
- If the engine is to be turned at starter speed, without starting, e.g. when checking compressions, pull plug off Hall sender (distributor).
- Do not connect a capacitor to terminal 1 (-).
- Do not replace 1 kω (identification: R1) with a different type even for radio interference suppression.
- For suppression purposes only 1 kω resistances are to be used on the H.T. leads and 5 kω spark plug connectors.

1.6 - Adjustment data, Spark plugs

Ignition timing1)	
Test value	3...8 °BTDC
Adjusting value	6±1 °BTDC
Speed	1400...1600 rpm2)
Ignition timing	1-3-4-2
Spark plugs1)	
VW/Audi	101 000 036AA; 101 000 050AC; 101 000 040AD
Manufacturer's designation	BUR6ET; W7LTCR; 14GH-7DTUR
Electrode gap	BUR6ET, 14GH-7DTUR: 0.7...0.9 mm W7LTCR: 0.9...1.1 mm
Tightening torque	25 Nm

1) The up-to-date figures and the spark plug change intervals:

=> Exhaust emissions test binder

2) The rpm is increased by the 1AV control unit in "04 basic setting" function.

1.7 - Checking and adjusting ignition timing

Special tools, testers, measuring instruments and auxiliary items required

- Fault reader V.A.G 1551 or vehicle system tester V.A.G 1552 with cable V.A.G 1551/3
- Ignition tester V.A.G 1767 or V.A.G 1367 with HT pick-up clamp V.A.G 1367/8

Check conditions

- Coolant temperature at least 80 °C
- No faults must be stored in fault memory
  => Page 3 , interrogating fault memory

Protected by copyright. Copying for private or commercial purposes, in part or in whole, is not permitted unless authorised by Volkswagen AG. Volkswagen AG does not guarantee or accept any liability with respect to the correctness of information in this document. Copyright by Volkswagen AG.
satelettronica

Test sequence

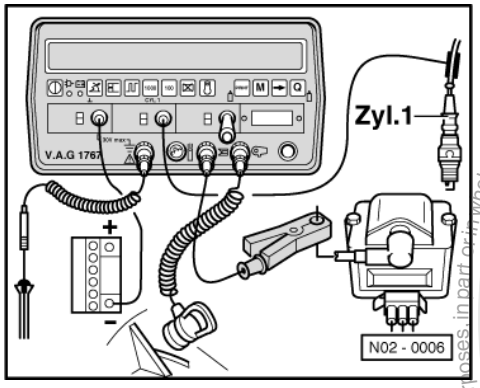

- -> Connect ignition tester V.A.G 1767 or ignition tester V.A.G 1367 with HT pick-up clamp V.A.G 1367/8.
- Connect fault reader V.A.G 1551 (V.A.G 1552). Start engine and select "Address word" 01 of engine control unit. When doing this the engine must be running at idling speed.
  (Connecting fault reader and selecting engine control unit => Page 2 .)

-> Indicated on display:

```
Rapid data transfer      HELP
Select function XX
```

- Press keys 0 and 4 for the function "Introduction of basic setting" and confirm entry with Q key.

-> Indicated on display:

```
Basic setting      HELP
Input display group number XXX
```

- Press keys 0, 0 and 1 for "Display group number 1" and confirm entry with Q key.

-> Indicated on display:
(1...4 = Display zones)

```
System in basic setting 1
     1     2     3     4
```

Do not continue with check until an 8 digit number block 00000000 appears in the 4th display zone.

Note:

If at one or more positions a 1 is displayed in display zone 4, the test conditions have not been fulfilled:

=>Page 15 ; Relevance of figures in 8 digit number block

- The engine control unit increases the idling speed to between 1400...1600 rpm.
- Check ignition timing.
  Specification: 3...8 ° before TDC1)
- Adjust ignition timing by turning distributor, if necessary.
  Adjustment figure: 6±1 ° before TDC1)

1) Up-to-date specifications:

=> Exhaust emissions test binder

- Press ⇒key.
- Press keys 0 and 6 for the function "End output" and confirm entry with the Q key.

Protected by copyright. Copying for private or commercial purposes, in part or in whole, is not permitted unless authorised by Volkswagen AG. Volkswagen AG does not guarantee or accept any liability with respect to the correctness of information in this document. Copyright by Volkswagen AG.
satelettronica

1.8 - Checking Hall sender

Special tools, testers, measuring instruments and auxiliary items required

- Test box V.A.G 1598/18
- Hand multimeter V.A.G 1526 or multimeter V.A.G 1715
- Adapter set V.A.G 1594
- Current flow diagram

Test sequence

- Pull connector off Hall sender (distributor).

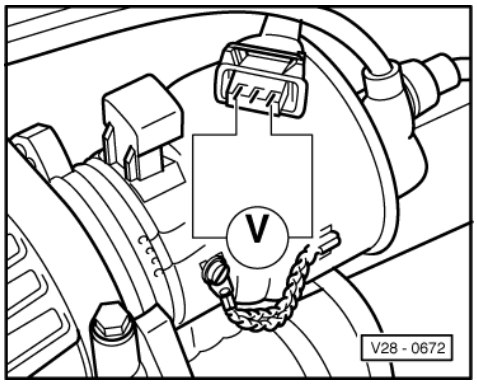

- -> Connect multimeter to measure voltage using aux. cables from V.A.G 1594 to the outer contacts of the connector.
- Switch on ignition.
  Specification: min. 9 V
- Switch off ignition.

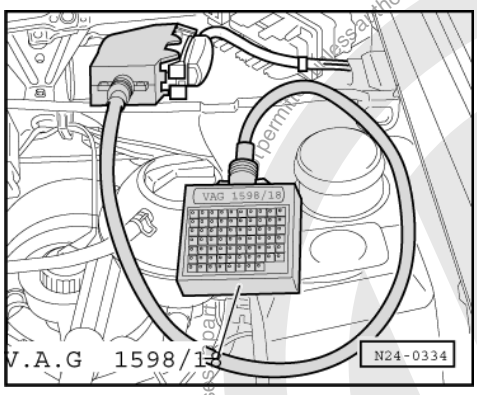

- -> Connect test box V.A.G 1598/18 to control unit wiring loom.
- Check wiring between test box and connector for open circuit according to current flow diagram.
  Contact 1+socket 17
  Contact 2+socket 13
  Contact 3+socket 8
  Wire resistance: Max. 1.5 ω
- Additionally check wires for short to one another.
  Specification: ∞ω

If no wiring fault is detected and voltage was present between contacts 1+3:

- Renew Hall sender => Page 69 , item 6 .

If no wiring fault is detected and no voltage was present between contacts 1+3:

- Renew engine control unit

Protected by copyright. Copying for private or commercial purposes, in part or in whole, is not permitted unless authorised by Volkswagen AG. Volkswagen AG does not guarantee or accept any liability with respect to the correctness of information in this document. Copyright by Volkswagen AG.
satelettronica

=> Page 25 , item 29

1.9 - Checking ignition transformer and output stage

Special tools, testers, measuring instruments and auxiliary items required

- Test box V.A.G 1598/18
- Hand multimeter V.A.G 1526 or multimeter V.A.G 1715
- Adapter set V.A.G 1594
- Diode test lamp V.A.G 1527
- Current flow diagram

Check conditions

- Hall sender OK.

Checking ignition transformer

- Pull connector and H.T. cable off ignition transformer (N152).

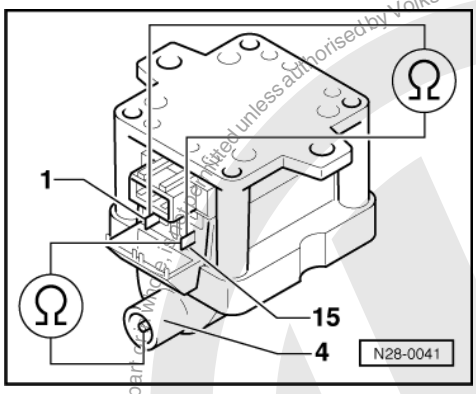

- -> Check primary resistance between terminals 1 and 15.
  Specification: 0.5...1.5 ω
- Check secondary resistance between terminals 4 and 15.
  Specification: 2.5...4 kω

If the specifications are not attained:

- Replace ignition transformer => Page 66 , item 4 .

Checking voltage supply

- Pull 3 pin connector off ignition transformer.

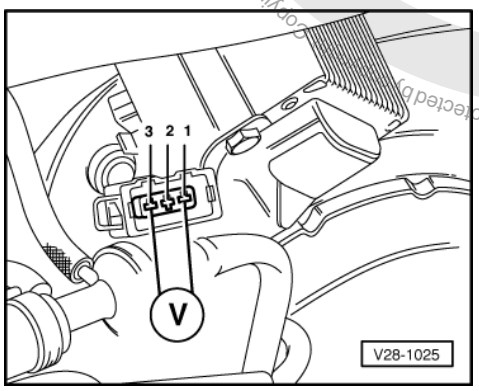

- -> Connect multimeter to measure voltage using aux. cables from V.A.G 1594 to the contacts 1+3 of the disconnected connector.

Copyright by Volkswagen AG. Volkswagen AG does not guarantee or accept any liability with respect to the correctness of information in this document. Copying for private or commercial purposes, in part or in whole, is not permitted unless authorised by Volkswagen AG. Protected by
satelettronica

- Switch ignition on.
  Specification: at least 11 V

If no voltage is present:

- Switch off ignition.
- Check wire between 3 pin connector contact 1 and earth for open circuit according to current flow diagram.
  Wire resistance: Max. 1.5 ω
- Check wire between 3 pin connector contact 3 and relay plate for open circuit according to current flow diagram.
  Wire resistance: Max. 1.5 ω

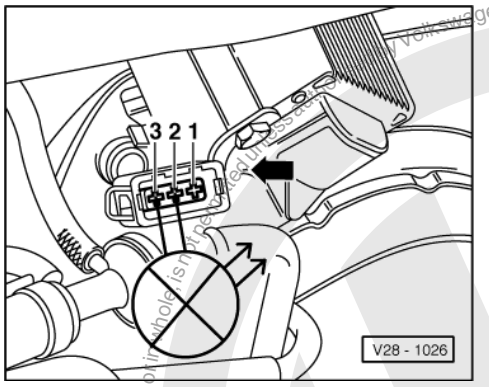

Checking activation

- Pull connector off injectors.
- -> Connect diode test lamp V.A.G 1527 using aux. cables from V.A.G 1594 and adapters V.A.G 1594/15 to contacts 2+3 of the connector.
- Operate starter and check ignition signal from engine control unit.
  LED must flicker

The LED does not flicker:

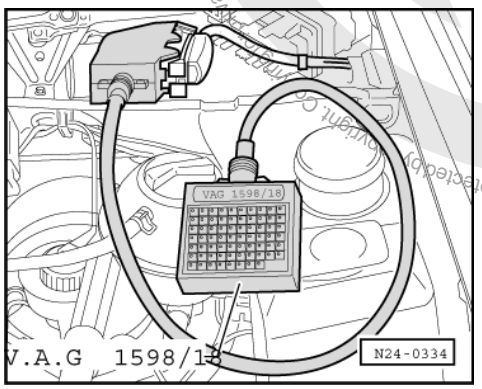

- -> Connect test box V.A.G 1598/18 to control unit wiring loom.
- Check wire between test box socket 24 and 3 pin connector contact 2 for open circuit according to current flow diagram.
  Wire resistance: Max. 1.5 ω
- Additionally check wires for short to one another.
  Specification: ∞ω

If no wiring fault is detected and voltage was present between contacts 1+3:

- Renew engine control unit
  => Page 25 , item 29

If the voltage supply and activation is OK.:

Protected by copyright. Copyright by Volkswagen AG. Volkswagen AG does not guarantee or accept any liability with respect to the correctness of information in this document. Copyright by Volkswagen AG.
satelettronica

- Connect 3 pin connector and H.T. cable to ignition transformer.

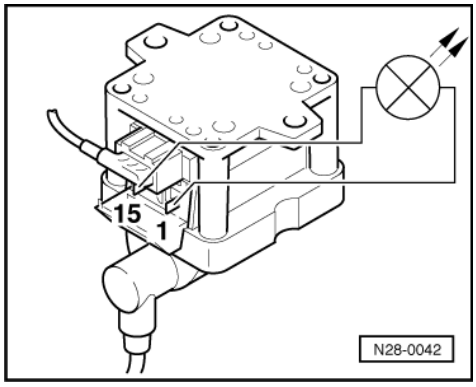

- -> Connect diode test lamp using aux. cables and clamps to the contacts 1 and 15 on ignition transformer.

Warning!
During the following test do not touch the terminals of the ignition transformer or test cables.

- Operate starter.
  The LED must flicker

1.10 - Checking knock sensor

Special tools, testers, measuring instruments and auxiliary items required

- Test box V.A.G 1598/18
- Hand multimeter V.A.G 1526 or multimeter V.A.G 1715
- Adapter set V.A.G 1594
- Current flow diagram

Test conditions

• Fault "00524 Knock sensor 1-G61" recognized by self-diagnosis

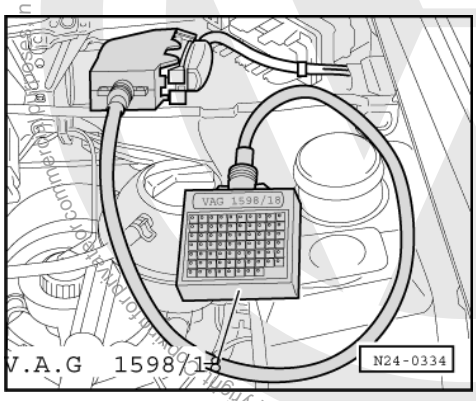

Test sequence

- -> Connect test box V.A.G 1598/18 to control unit wiring loom.
- Check wiring and knock sensor for short circuit.
  Sockets: 19+39, 39+45, 19+45
  Specification: ∞ω

If no short is detected:

Protected by copyright. Copyright by Volkswagen AG. Volkswagen AG does not guarantee or accept any liability with respect to the correctness of information in this document.
satelettronica

- Remove starter.

=> Repair group 27; Removing and installing starter Removing and installing starter

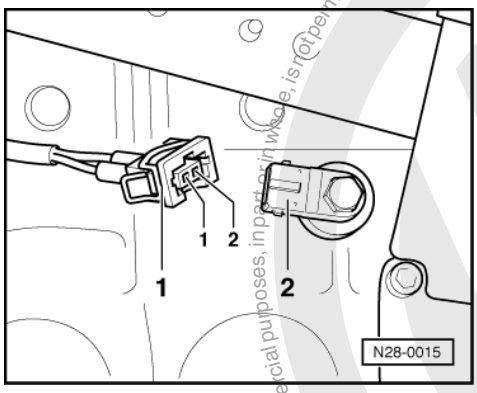

- -> Pull connector -1- off knock sensor 1 (G61) -2-.
- Check wiring between test box and knock sensor for open circuit according to current flow diagram.
  Contact 1+socket 39
  Contact 2+socket 19
  Wire resistance: Max. 1.5 ω
- Measure resistance between knock sensor contacts.
  Specification ∞ω

If no wiring fault is detected:

- Loosen knock sensor and tighten again to 20 Nm.
- Install starter again.
- Carry out test drive.

  During the road test the following operating conditions must be fulfilled:
  - The coolant temperature must exceed 80 °C .
  - When the temperature is reached, the operating conditions
    Idling
    Part throttle
    Full throttle
    Overrun
    must be attained several times.
  - At full throttle the speed must exceed 3500 rpm.

- Again interrogate the control unit fault memory.

If the fault is still present:

- Replace knock sensor
  =>Page 68 , item 14 .

Copyright by Volkswagen AG. Volkswagen AG does not guarantee or accept any liability with respect to the correctness of information in this document. Copyright by Volkswagen AG. Protected by copyright. Copying for private or commercial purposes, in part or in whole, is not permitted unless authorised by Volkswagen AG.
satelettronica